EASYPHARMA

CLEAN **ROOMS**

[PHARMACEUTICAL * CHEMICAL * BIOTECH * ELECTRONICS]

[**TECHNICAL** DOCUMENTATION]

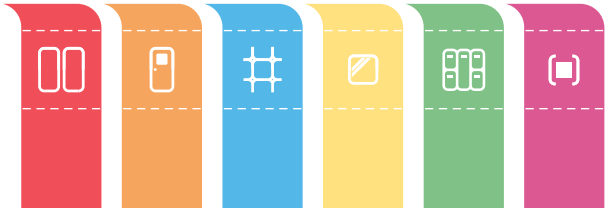

TECHNICAL DOCUMENTATION

INDEX

PARTITION WALLS
[1.1 » COMPOSITION] P. 05

PARTITION WALLS
[1.2 » FLOOR FITTINGS] P. 09

PARTITION WALLS
[1.3 » VERTICAL AND FALSE CEILING FITTINGS] P. 13

PARTITION WALLS
[1.4 » ACCESSORIES] P. 17

DOORS
[2.1 » TYPES] P. 21

DOORS
[2.2 » ACCESSORIES] P. 25

FALSE CEILING
[3.1 » T - COMPOSITION] P. 29

FALSE CEILING
[3.2 » HIGH LOAD] P. 33

GLASS PANEL
[4.1 » COMPOSITION] P. 37

FURNITURE
[5.1 » FOR CHANGING ROOMS] P. 41

PASS BOX
[6.1 » PASS-BOX AND PASS-TROLLEY] P. 45

EASYPHARMA
CLEAN ROOMS

The quality of
our products is the
strength of **our work**.

EASYPHARMA

*

The freestanding modular wall that we produce is extraordinarily simple: a 45 mm thick sandwich panel, expertly squared with CNC machines, edged by a high-adherence aluminium profile specifically designed to allow connection to all fitting systems.
All panels are custom made according to scrupulous design guidelines to ensure the correct balance between spaces, alignment and design.
The possibility of choosing different types of elements makes the panel suitable for different areas of application in contamination controlled environments.
The quality of each component is guaranteed by the selection based on extensive experience in this sector along with relative certification.
Available in various colours.

HPL

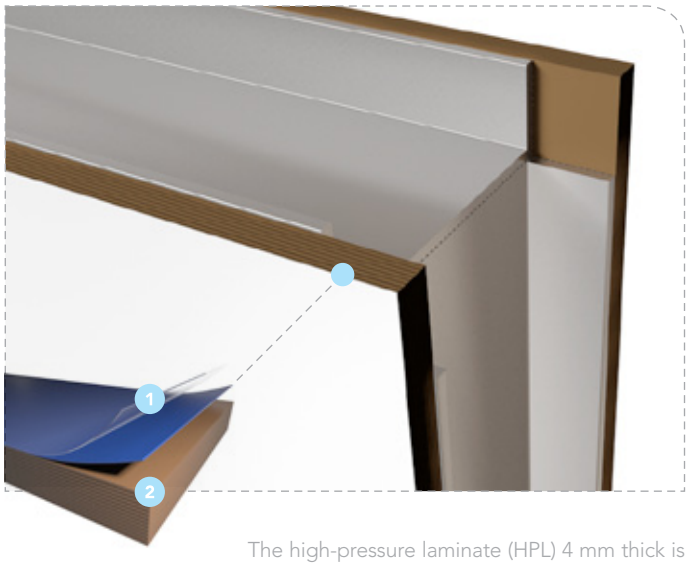

The high-pressure laminate (HPL) 4 mm thick is a solid compound consisting of over 40 layers of paper impregnated with melamine and phenolic resins. The sheet of HPL, measuring 1300x3050 mm, has a transparent finishing (1) layer on both external sides that protects the decorative layer below. The central layer, dark brown (3), is composed of a series of kraft papers impregnated with phenolic resins, pressed to 9 MPa at 150 ° C. A protective PVC coating protects the panel during the production, transportation and installation phases. We chose to use HPL-grade products only, in accordance with standard EN438.

ALUBOND

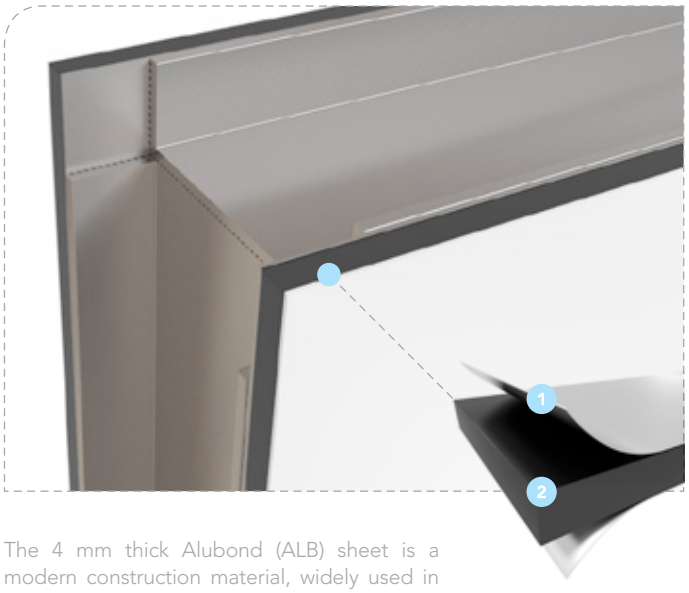

The 4 mm thick Alubond (ALB) sheet is a modern construction material, widely used in architecture for exterior curtain walls. Ideal for environments with relative humidity <20%. It consists of an extruded polyethylene IDPE (2) central core and on the outside, on both sides, by a sheet of pre-painted (1) aluminium, highly resistant to atmospheric agents PVDF 25 micron - Kynar 500 ref. (EN AW-3005 (A) (Al 0.5 Mn 1mg) ACC. EN 573) H42. A protective PVC coating protects the panel during the production, transportation and installation phases.

DESCRIPTION	HPL	ALB
THICKNESS	4 mm	4 mm
MODULAR PANEL DIMENSIONS	1270 x h3000 mm	1200 x h3000 mm
OVERLAPPING PANELS	YES	YES
WEIGHT	5,9 kg/mq	5,5 kg/mq
PROTECTIVE FILM	YES	YES
FIRE RESISTANCE CLASS	B-S2-D0 (EN 13501-1)	C-S2-D0 (EN 13501-1)
COLOUR	FROM THE TABLE	WHITE RAL 9010
RESISTANCE TO SCRATCHES AND BUMPS (1-10)	9	7
STEAM AND WATER RESISTANT (1-10)	9	8
ANTISTATIC PROPERTIES (1-10)	10	6
HYGIENIC AND EASY TO CLEAN (1-10)	10	8

EXPLODED VIEW OF THE WALL

HPL OR ALUBOND

INSULATION

PERIMETER,
HIGH-GRIP ALUMINIUM

INSULATION

POLYSTYRENE [PL]

Description
Slabs of expanded polystyrene (EPS), calibrated to a thickness of 37 mm.

Density
35 Kg/m3

Declared thermal conductivity (λ)
0,033 W/mK (EN 12667 or 13163)

Fire reaction class
E (EN 13501-1)

ROCKWOOL [RW]

Description
Slabs of fireproof rock wool oriented perpendicular to the plane, calibrated to a thickness of 37 mm.

Density
100 Kg/m3

Declared thermal conductivity (λ)
0,037 W/mK (EN 12667 or 14303)

Fire reaction class
A1 (EN 13501-1)

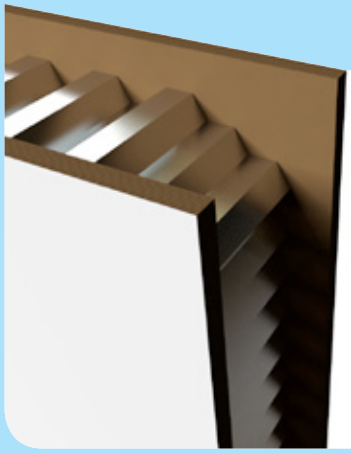

ALUMINIUM HONEYCOMB [HC]

Description
Sheets of aluminium honeycomb, fireproof, consisting of hexagonal cells with a diameter of 12 mm made of aluminium alloy 3003, thickness 37 mm.

Density
35 Kg/m3

Declared thermal conductivity (λ)
0,026 W/mK (still air)

Fire reaction class
A0 (EN 13501-1)

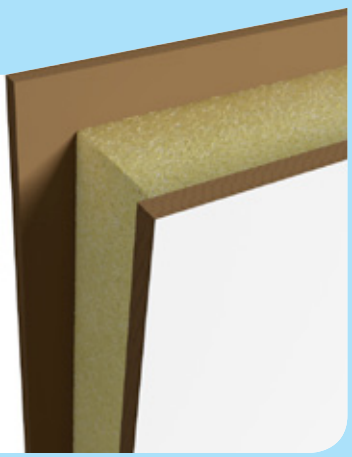

POLYURETHANE [PU]

Description
Sheets of polyurethane foam, calibrated to a thickness of 37 mm.

Density
35 Kg/m3

Declared thermal conductivity (λ)
0,022 W/mK (EN 12667)

Fire reaction class
B3 (EN 13501-1 or DIN4102)

CERTIFICATION AND TESTING

Mechanical resistance tests and crash tests, thermal transmittance, sanitising test and reactions to acids.
All available in hard and digital copies on demand.

TÜV CLUB TÜV Hessen PROFi Member

ISOENCErtifications

UNI 10386

HPL COLORS

ALB

WHITE [E001]
BLUE [E004]
IVORY [E002]
CYAN [E003]
SAND [E006]
GREY [E008]
CEMENT [E009]
MOUSE [E010]
BLUEBERRY [E015]
RED [E016]
STRAW [E017]
LEMON [E018]
SUNSET [E019]
ORANGE [E020]
BOTTLE [E024]
BRICK [E025]
ECO [E026]
SCHOOL [E027]
ALUBOND [E000]

*THE CLOSEST TO THE REAL COLOURS

CLEANING

HPL SURFACES

Are resistant to all commonly used solvents and chemical products, for example: acetone, alcohol, petrol, perchlorethylene, MEK. Do not use abrasives or scouring substances (steel wool, abrasive powder), do not use strong acids, drain cleaners or hydrochloric acid.

SURFACES IN ALB

The most common non-abrasive detergents can be used, ph 6-7 in a solution up to 10%. After cleaning, use water to remove any residue.

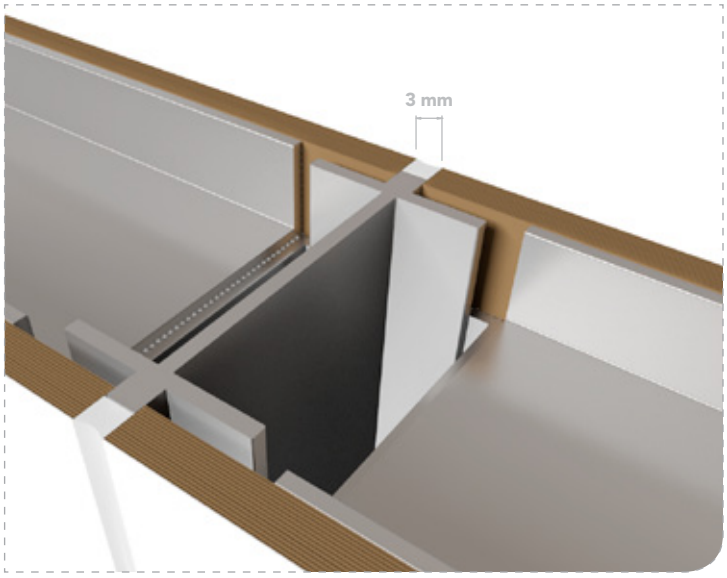

SILICONE

Silicone, silicone-based single-component sealant, is a vital material for seals and sealing clean rooms.
We always select the best silicone available on the market with the following characteristics: high elastic properties, excellent resistance to aging and exposure to UV rays, high resistance to friction, free of blisters, non-sticky surfaces, high adhesion level, non-corrosive, fungicidal properties, tested according to DIN 18545 Part 2 group E, conforming to the requirements of DIN 18540-F and the requirements of ISO 11600 G 25 LM.

COLORS
Walls: neutral transparent and opaque
Floors: neutral transparent and opaque
T false ceiling: opaque white acetic
HLFC false-ceiling: antique matt white neutral
Glass and window panels: neutral matte black

This drawing is the exclusive property of Easypharma Srl and all extraction, reproduction or release to third parties is strictly prohibited without prior authorisation. Easypharma Srl shall protect and enforce its rights pursuant to the laws in force.

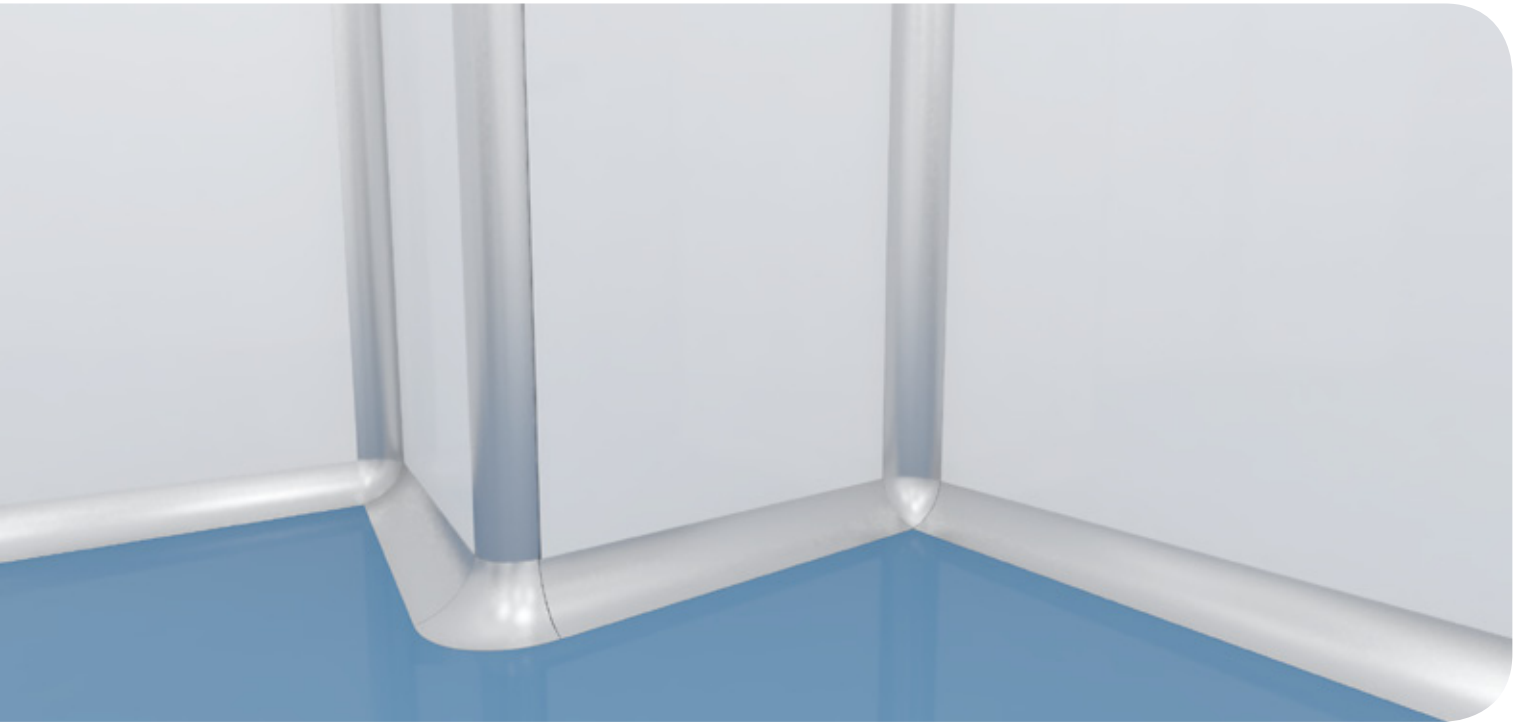

*

Coupling systems between the partition wall and the floor. Made entirely in-house using corporate design profiles, they are produced by carefully following the GMP guidelines, the twenty years of experience in the design, production and installation of clean rooms. Attention to detail is a priority for a MADE IN ITALY design.

N10 + R70 - FLOOR

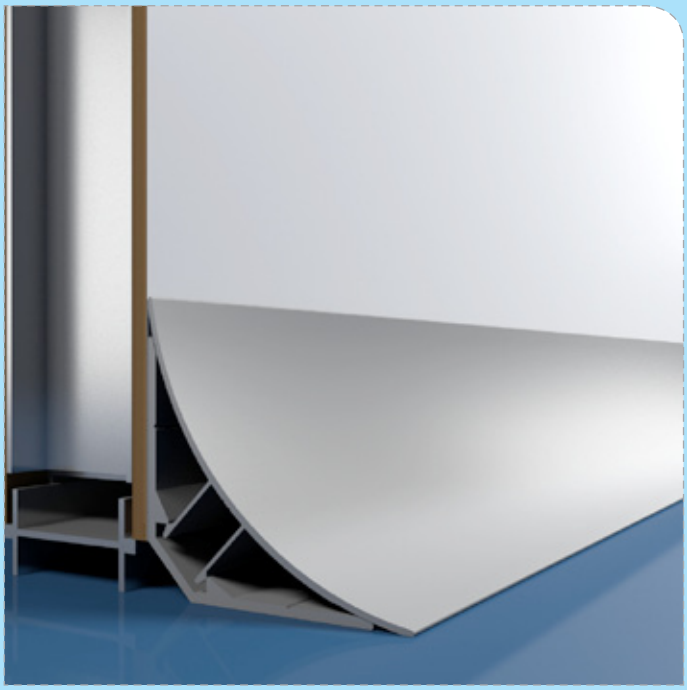

Description
Support coupling system, with click-in profiles for high-precision fitting to screeds. Curvature radius - 70 mm.

Material
Extruded aluminium alloy 6060

Colour
Natural anodised silver (RAL 9010 on request)

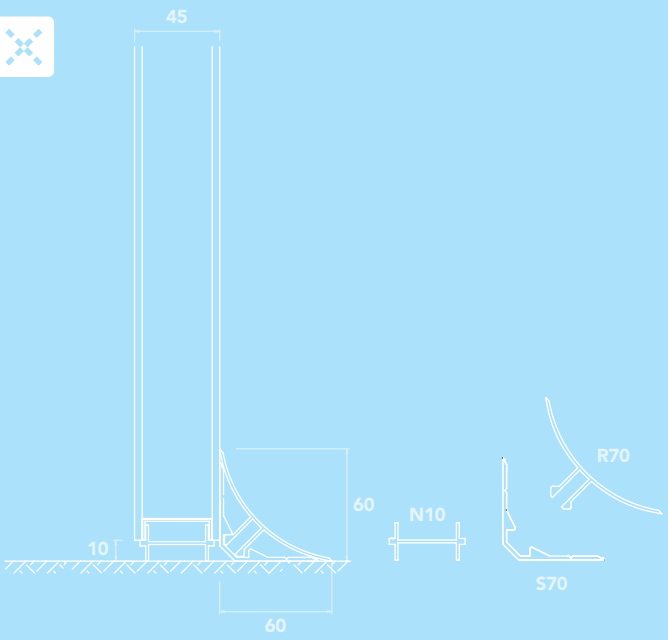

N90 + R70 - FLOOR

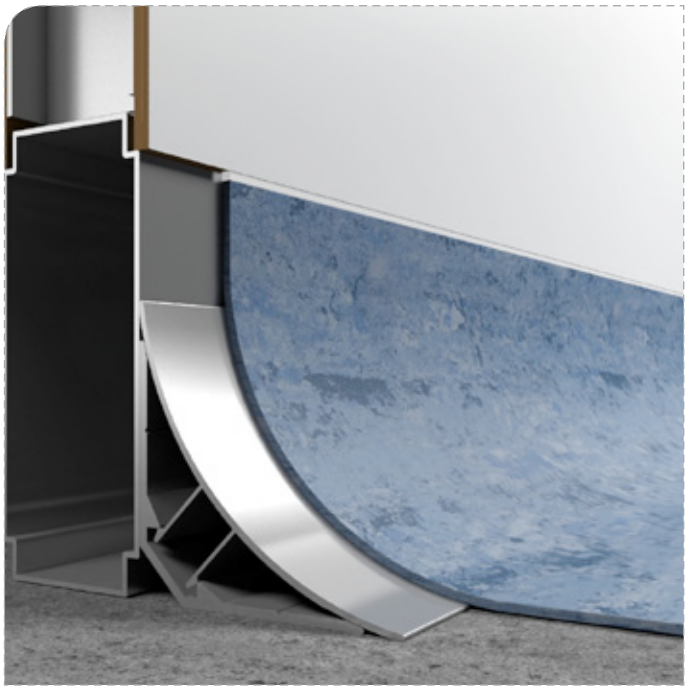

Description
Flush-fitting coupling system, with click-in profiles for the preparation of a high-precision fitting with 2 mm thick PVC flooring or epoxy resin. Bending radius - 70 mm.

Material
Extruded aluminium alloy 6060

Colour
Raw

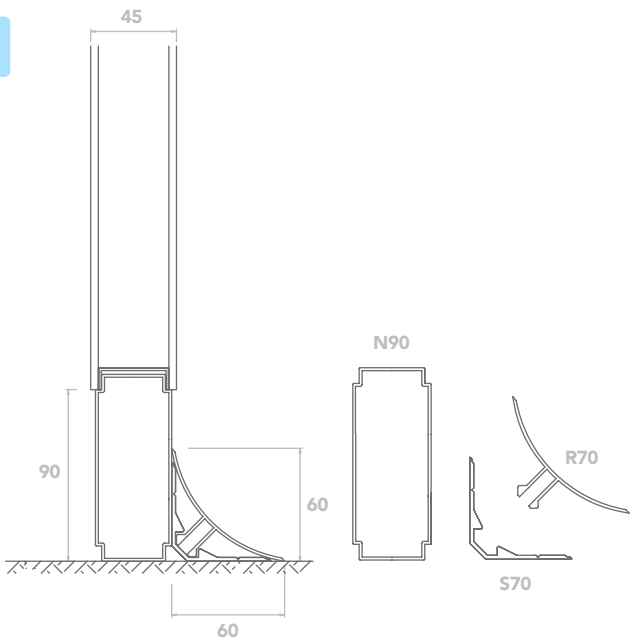

BUMPER 120 - FLOOR

Description
Protection system for walls against from accidental impact when handling with transpallet devices. Fitting in support of any type of floor.

Material
Extruded aluminium alloy 6060

Colour
Natural anodised silver (RAL 9010 on request)

BUMPER 200 - FLOOR

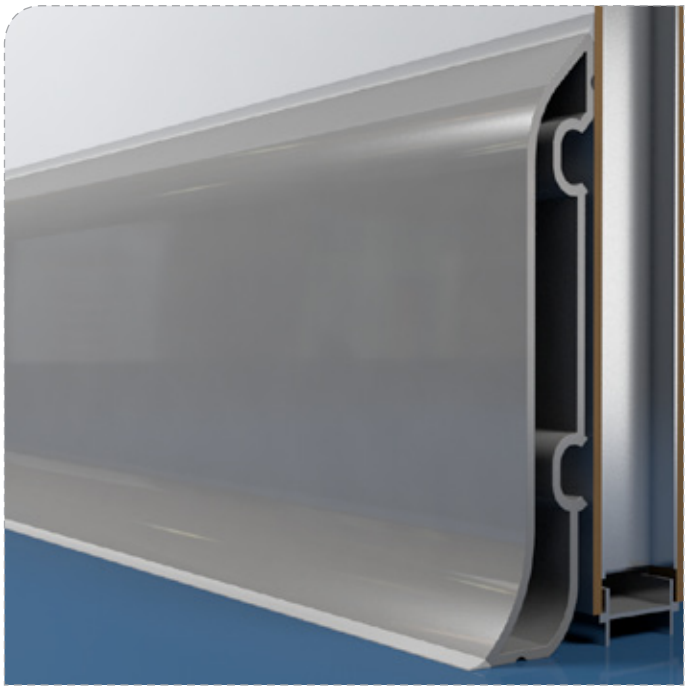

Description
High protection system for walls with absorption of accidental impact when handling with transpallet devices. Fitting in support of any type of floor.

Material
Co-extruded PVC

Colour
Grey RAL 7040 (white RAL 9010 on request)

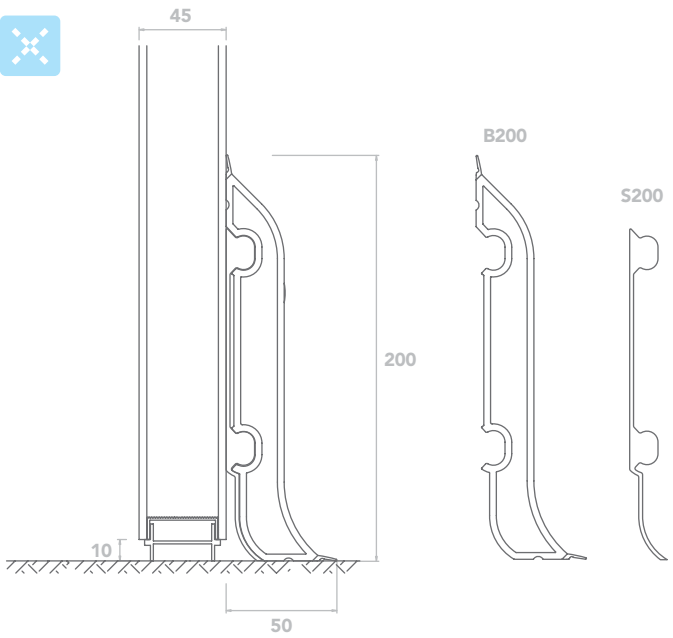

CONNECTIONS N10 + R70

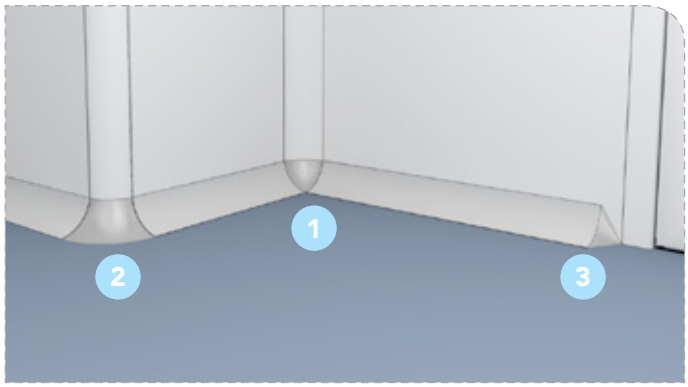

Description
• [1] Eighth of a sphere • [2] Quarter of a sphere
• [3] Terminal.

Material
Die-cast aluminium.

Colour
Natural silver grey paint, manufactured and tested for 1000 hours in salt spray. Surface with anti-scratch treatment.

CONNECTIONS N90 + R70

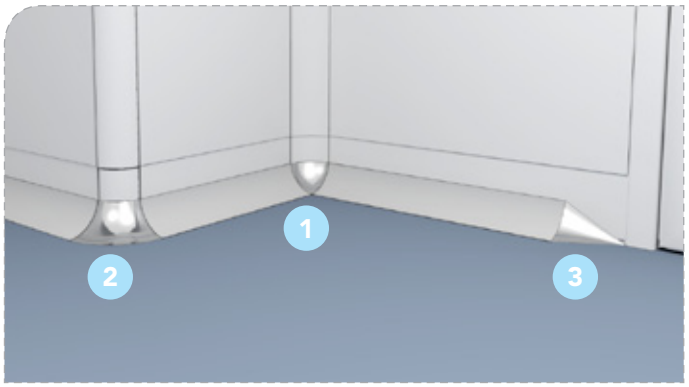

Description
• [1] Eighth of a sphere • [2] Quarter of a sphere
• [3] Terminal.

Material
Die-cast aluminium.

Colour
Raw.

CONNECTIONS + BUMPER 120

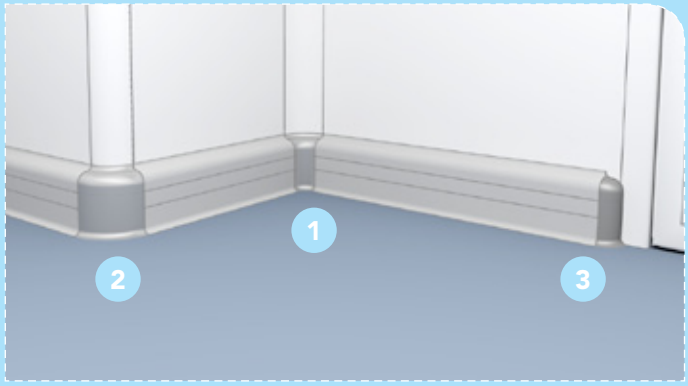

Description
• [1] Eighth of a sphere • [2] Quarter of a sphere
• [3] Terminal.

Material
Anticorrosive aluminium alloy 6082.

Colour
Anticorrosive aluminium alloy 6082
Colour: Natural silver grey paint, manufactured and tested for 1000 hours in salt spray. Surface with anti-scratch treatment.

CONNECTIONS + BUMPER 200

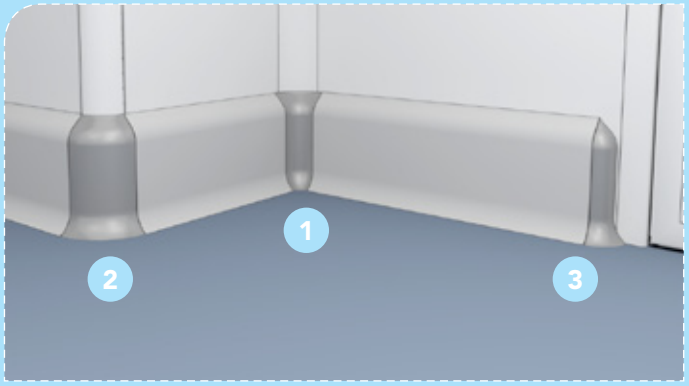

Description
• [1] Eighth of a sphere • [2] Quarter of a sphere
• [3] Terminal.

Material
Die-cast aluminium.

Colour
Grey RAL 7040 Surface with anti-scratch treatment.

This drawing is the exclusive property of Easypharma Srl and all extraction, reproduction or release to third parties is strictly prohibited without prior authorisation. Easypharma Srl shall protect and enforce its rights pursuant to the laws in force.

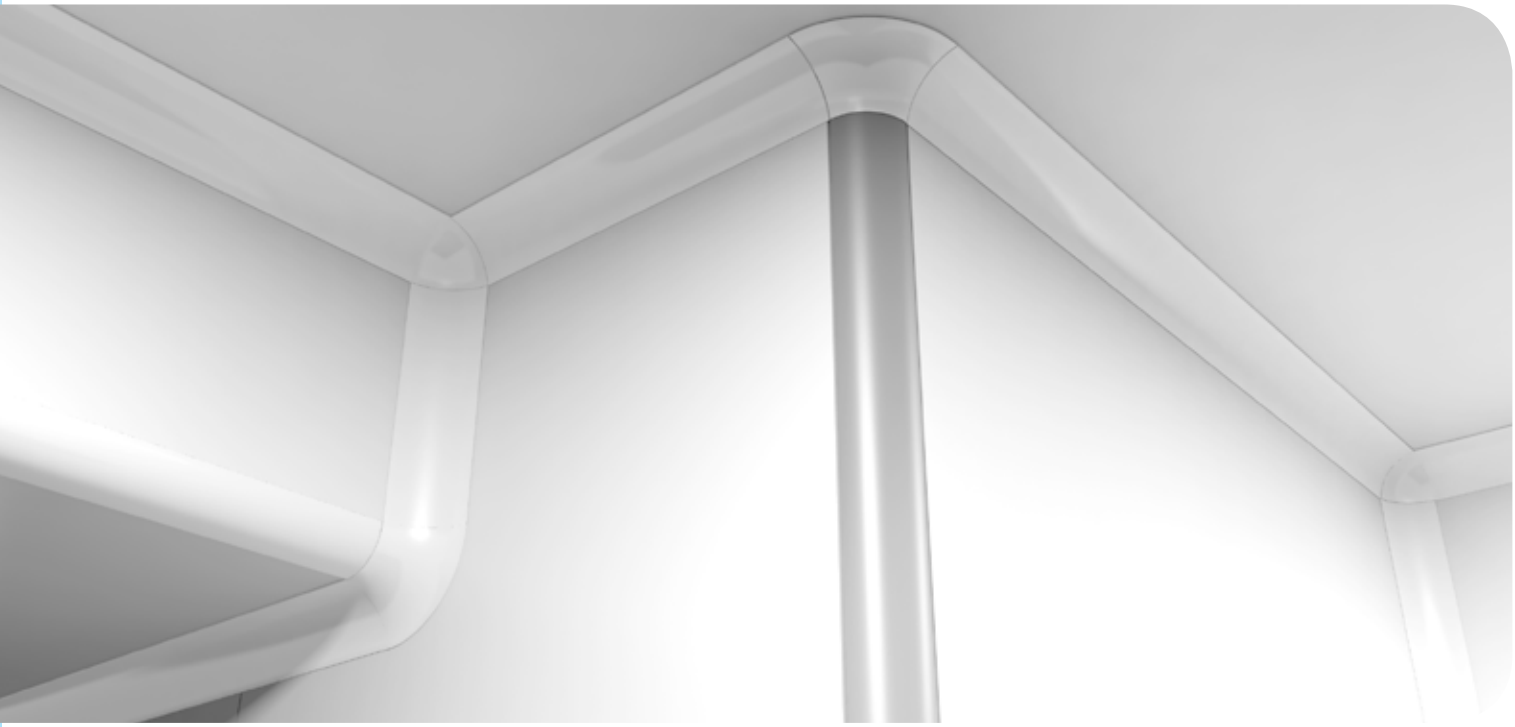

*

Coupling systems for the vertical connection between partition walls and horizontal connection of walls and false ceilings. Made entirely in-house using corporate design profiles, they are produced by carefully following the GMP guidelines, and twenty years of experience in the design, production and installation of clean rooms. Attention to detail is a priority for a MADE IN ITALY design.

R70 - VERTICAL

Description
Coupling system, with click-in profiles, for high- precision connections of all types of walls (partition walls, plasterboard, brick). Bending radius - 70 mm.

Material
Extruded aluminium alloy 6060

Colour
Natural anodised silver (RAL 9010 on request)

R50 - VERTICAL

Description
Flush-fitting coupling system, with click-in profiles, for the high-precision corner fitting between partition walls. Bending radius - 50 mm.

Material
Extruded aluminium alloy 6060

Colour
Natural anodised silver (RAL 9010 on request)

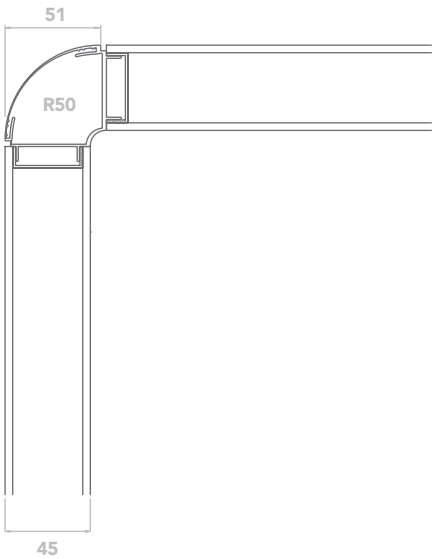

M180 - VERTICAL

Description
Flush-fitting coupling system, with click-in profiles, for the high-precision corner fitting between partition walls. Bending radius - 70 mm.

Material
Extruded aluminium alloy 6060

Colour
Natural anodised silver (RAL 9010 on request)

R90 - VERTICAL

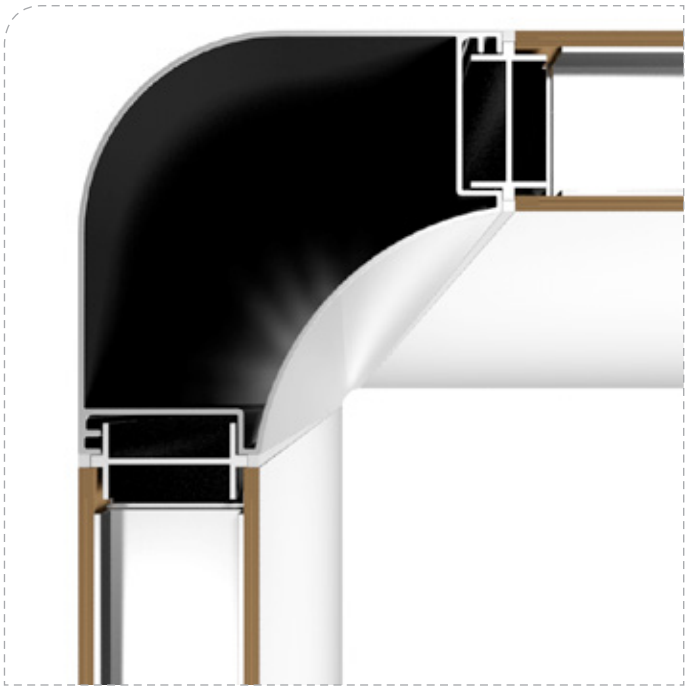

Description
Flush-fitting coupling system, with click-in profiles, for the high-precision corner fitting between the various partition walls. Bending radius - 70 mm.

Material
Extruded aluminium alloy 6060

Colour
Natural anodised silver (RAL 9010 on request)

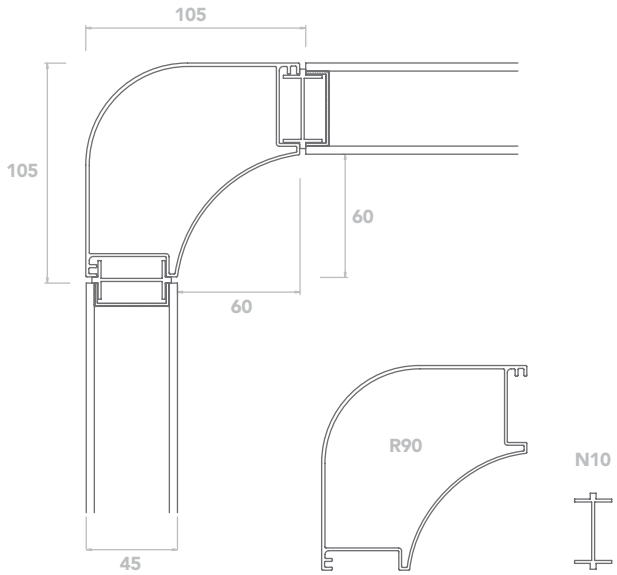

R70N - FALSE CEILINGS

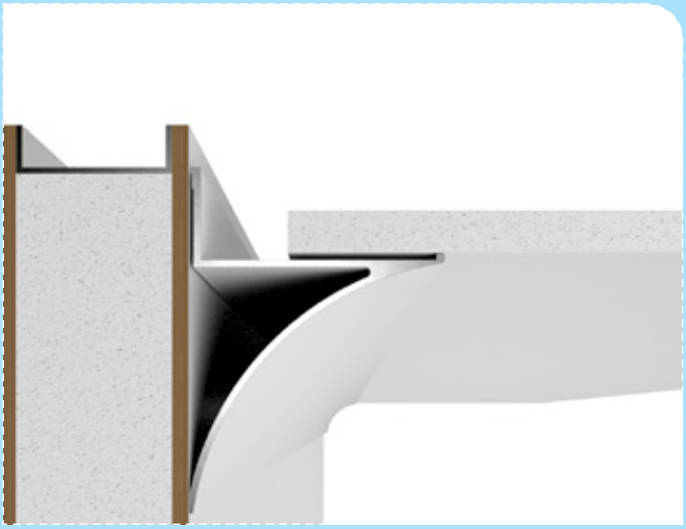

Description
Support coupling system support, fully compatible with R70, for the high-precision connections between wall and ceiling built in-house (see 3.1 T Ceilings - composition).

Material
Extruded aluminium alloy 6060

Colour
White RAL 9010 (silver anodized natural on request)

R70 - FALSE CEILINGS

Description
support coupling system, with click-on profiles, for the high-precision connections between walls and high-load false ceilings (see 3.2 false ceilings - high load). Bending radius - 70 mm.

Material
Extruded aluminium alloy 6060

Colour
White RAL 9010 (silver anodized natural on request)

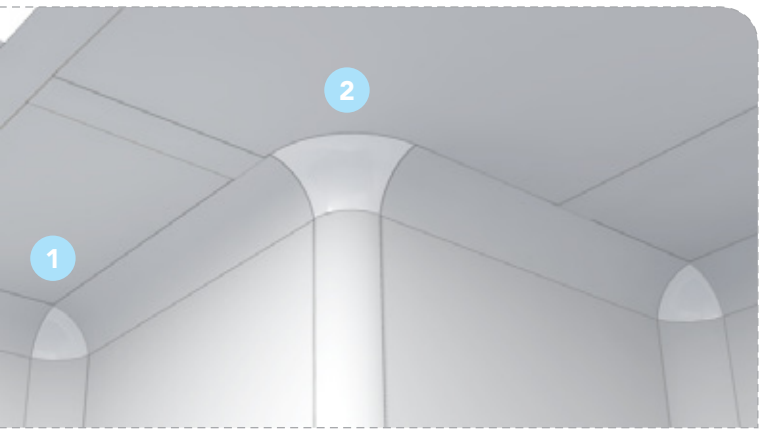

R70N E R70 CONNECTIONS

Descrizione
• [1] Eighth of a sphere • [2] Quarter of a sphere

Materiale
Die-cast aluminium

Colorazione
White RAL 9010 (natural silver-grey on request)

This drawing is the exclusive property of Easypharma Srl and all extraction, reproduction or release to third parties is strictly prohibited without prior authorisation. Easypharma Srl shall protect and enforce its rights pursuant to the laws in force.

*

We have always been at the complete disposal of our customers to include all required accessories within the clean rooms, creating a tailored product giving flexibility to meet constantly evolving requirements.
Based on the experience gained over time, we propose a range of accessories chosen and created as standard products, aiming to facilitate the choice by customers and speed up all production and installation phases.
Always available for your every need!

EASY ELECTRO

All components belong to the Bticino
MATIX series
bticino

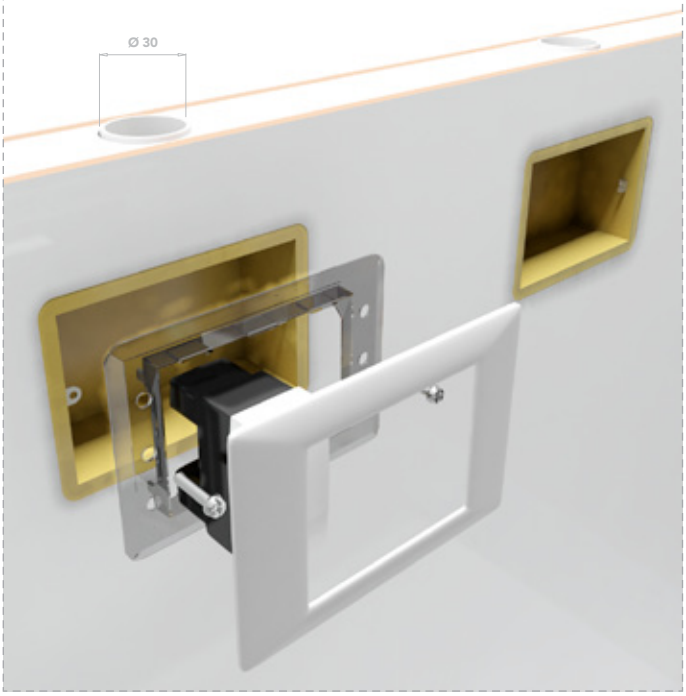

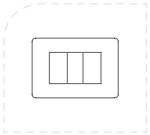

3-module electrical junction box
code: E503
colour: yellow

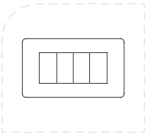

4-module electrical junction box
code: E504
colour: yellow

socket 1P 16AX – 250V a.c (1 module)
code: AM5001
colour: white

shunting switch 1P 16AX – 250V a.c (1 module)
code: AM5003
colour: white

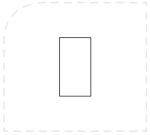

Socket 1P (NO) 10A – 250V a.c (1 module)
code: AM5005
colour: white

Bypass socket 2P + E 16 A 250 V ac (1 module)
code: AM5180
colour: white or red

Bypass button and Schuko 2P + E 16A 250V ac (2 modules)
code: AM5440/16
colour: white or red

RJ11 connector (1 module)
code: AM5982
colour: white

RJ45 connector Category 6 UTP (1 module)
code: AM5979C6
colour: white

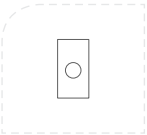

False polo (1 module)
code: AM5000
colour: white

EASY 3PHASE

Complete system for use in contamination controlled environments with 220V and 380V three-phase sockets. Easy to maintain and use, designed to be installed in all situations: single or double wall, maintaining a sophisticated and unique design.

» FLUSH-FITTING

- Stainless steel plate, 15/10
- Finish: electrolytic polishing
- Can only be installed on double wall or perimeter walls. Requires preparation of no. 2 x 30 mm raceways for cable laying .
- BLUE 16A 220V 2P + E 16A 230V 6H SBF - IP44 socket
- RED 32A 380V 3P + N + E 32A 400V 6H SBF - IP44 socket

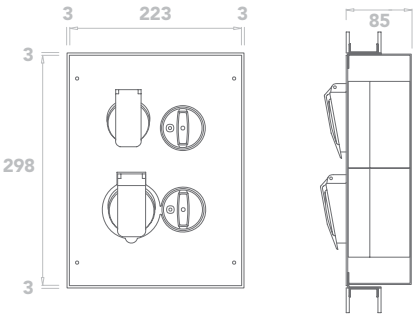

» SURFACE MOUNTED

- Complete system in 15/10 stainless steel
- Finish: electrolytic polishing
- Can be installed on single partition walls. Requires preparation of no. 2 x 30 mm raceways for cable laying.
- BLUE 16A 220V 2P + E 16A 230V 6H SBF - IP44 socket
- RED 32A 380V 3P + N + E 32A 400V 6H SBF - IP44 socket

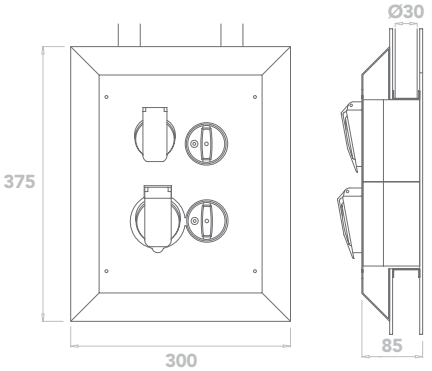

EASY GRILL

Complete wall-mounting system for air intake filtration. Designed to house the pre-filter and regulator shutter, where applicable, this a flexible and high-performing solution for all types of use.

Main features
- Made from stainless steel, 15/10
- Finish: electrolytic polishing
- Perforation: 40% (empty/solid)
- No visible fastener screws.
- Perfectly flush-fitting with the wall.
- Designed to house a pre-filter, class G3 (EN779)
- Designed to house a regulator shutter.
- Magnetic system for removal of the front section.
- Easy maintenance and cleaning.

Proposed standard dimensions
- 300xh.300 mm
- 300xh.600 mm
- 600xh.600 mm
- 600xh.900 mm

EASY MAGNEHELIC

Complete system for the installation of the DWYER Magnehelic, differential analogue pressure gauge for low fields.

» FLUSH FITTING

- Dwyer magnehelic, Series 2000
- Precision ± 2% - 81 fields
- Version with airtight housing IP 65
- Simple interlocking fitting
- Can only be installed on double walls or perimeter walls

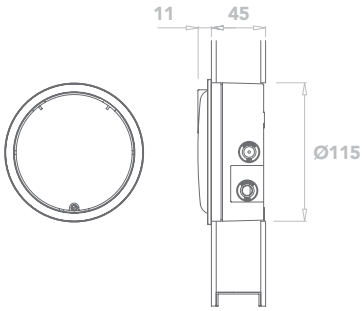

» SURFACE MOUNTED

- Dwyer magnehelic, Series 2000
- Precision ± 2% - 81 fields
- Version with airtight housing IP 65
- Complete system in 15/10 stainless steel
- Finish: electrolytic polishing
- Can be installed on single partition walls. Requires preparation of no. 1 x 30 mm raceways for connection pipe laying.

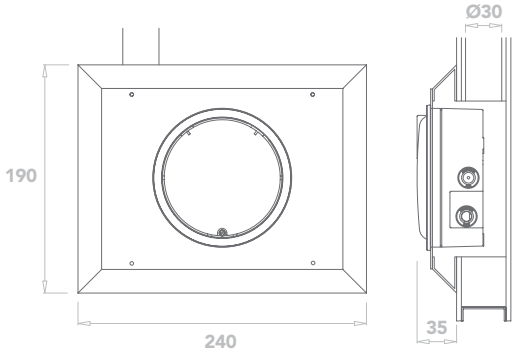

EASY 2DISMANTLE

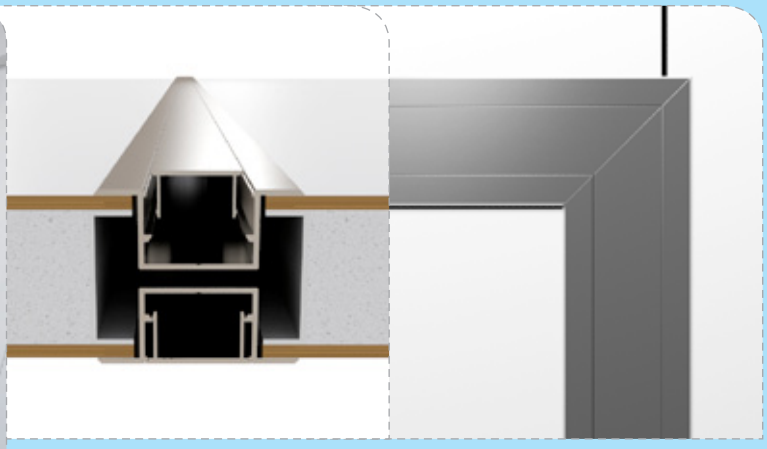

Description
Complete system for the preparation of an easily removable area on a partition wall. This accessory is used to facilitate access for machines during the installation phase, their maintenance over the years to come or to enter inspection areas or double walls.

Material
Extruded aluminium alloy 6060

Colour
Natural anodised silver

EASY VOX

Flush-mounted telephone system for hands-free communication in contamination controlled environments.

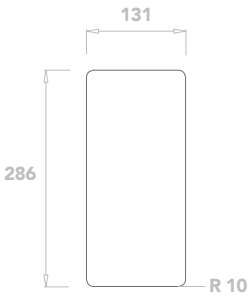

Description
- Antibacterial properties guaranteed by the special front surface coated with a hardwearing bacteria-resistant membrane, totally free of holes.
- IP66 protection
- Total depth 34 mm, it requires preparation of no. 1 x 30 mm diameter raceway to lay the cables.
- Powered directly by the standard analogue lines, both urban and internal (PABX)
- Adjustable ring tones and incoming call LEDs
- Auto-hang up and autoreply.
- Fully washable with common detergents or bactericides.
- VoIP version available on demand

This drawing is the exclusive property of Easypharma Srl and all extraction, reproduction or release to third parties is strictly prohibited without prior authorisation. Easypharma Srl shall protect and enforce its rights pursuant to the laws in force.

*

We have decided to produce a sturdy and elegant door.
The jamb and the sash profile are extruded in aluminium which have been refined and redesigned over the years so as to achieve efficient mechanical performance and make them capable of accommodating a wide range of accessories.
Whether fitted with hinged or sliding panels, maximum attention has been given to all detail of these doors: the panel is framed on all four sides, all the cuts are at 45 degrees and all the accessories, after in-depth research, enhance the door making it absolutely unique.

HINGED DOORS ON PARTITION WALLS

Flush-fitting hinged door system on 45 mm thick partition wall. It is made of high-precision aluminium profiles, designed to be hardwearing and easy to clean parts.

Door panel
See chart 1.1 > Partition Walls - Composition

Accessories
See 2.2 Doors - Accessories sheet

Material
Extruded Aluminium alloy 6060

Colour
Natural anodised silver

» DOOR PANEL TYPES

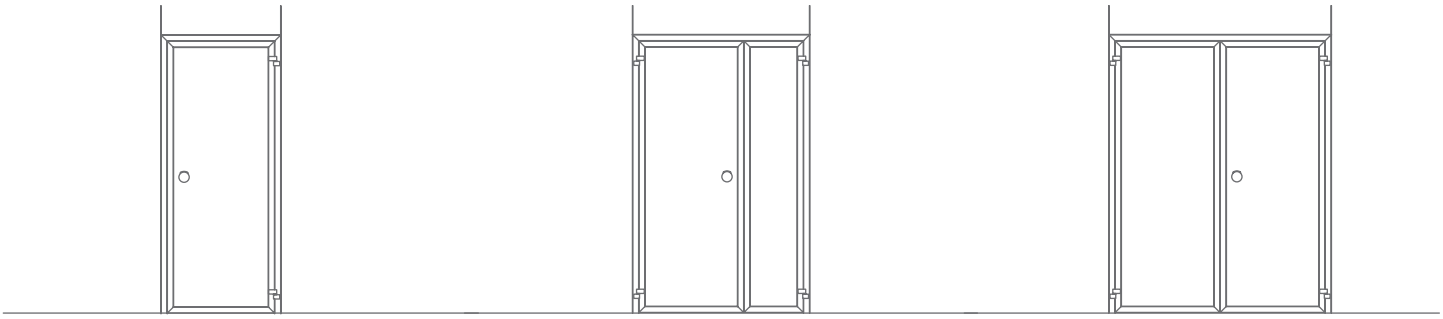

1 wing:
700, 800, 900, 1000, 1200 mm
standard height 2100 mm

1.5 wing:
900+300, 800+400, 1000+600 mm
standard height 2100 mm

2 wings:
800+800, 900+900, 1000+1000 mm
standard height 2100 mm

» OPENING DIRECTION

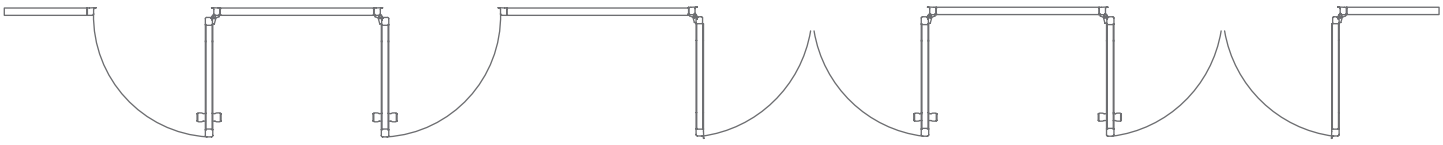

opening direction **right [R]**

opening direction **left [L]**

opening direction **right [R]**

opening direction **left [L]**

HINGED DOORS ON BRICK

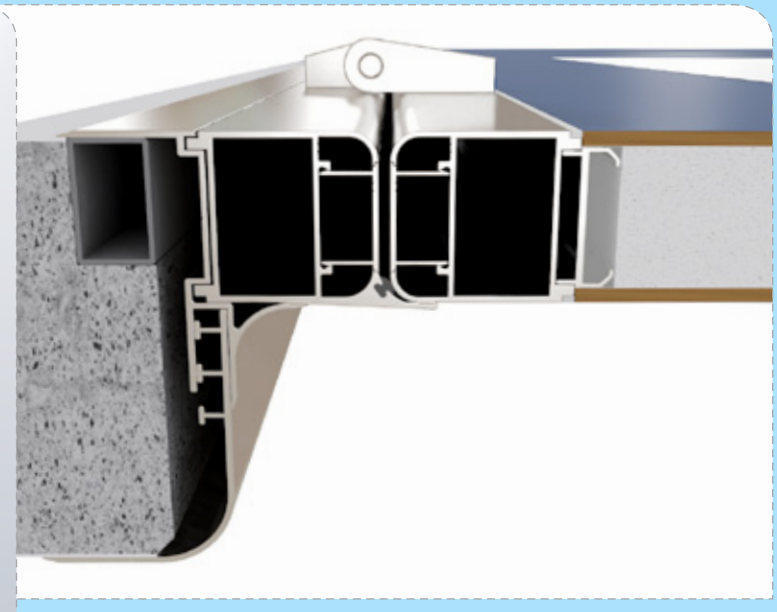

Hinged door system supported by brick or plasterboard. Realised by coupling a system to the partition wall door profiles that connects to and embraces the wall and another used to achieve the desired thickness (> 100 mm). Sturdy and easy to clean parts.
Requires preparation of galvanized steel subframe.

Door panel
See chart 1.1 > Partition Walls - Composition

Accessories
See chart 2.2 > Doors - Accessories sheet

Application
Partition plasterboard or brick wall

Material
Extruded aluminium alloy 6060

Colour
Natural anodised silver

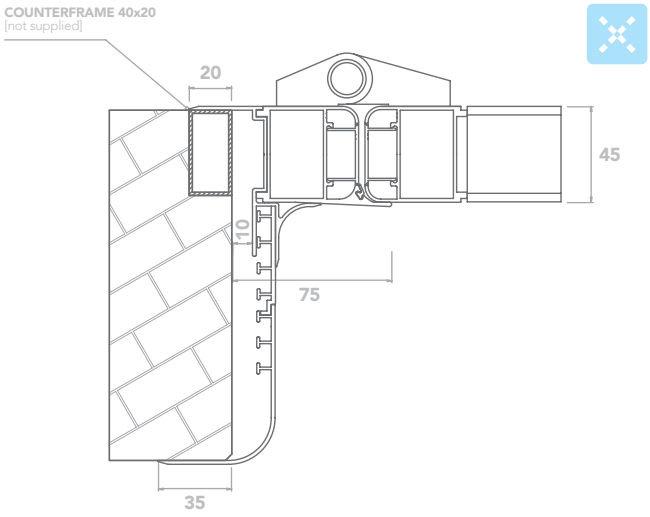

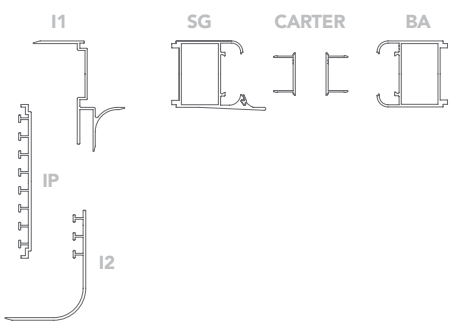

NOMINAL DIMENSION	
B	H
800 mm	2100 mm
900 mm	2100 mm
1000 mm	2100 mm
800 + 800 mm	2100 mm
1000 + 600 mm	2100 mm

COMPARTMENT ON WALL	
B + 150 mm	H + 75 mm
950 mm	2175 mm
1050 mm	2175 mm
1150 mm	2175 mm
1750 mm	2175 mm
1750 mm	2175 mm

SLIDING DOOR

Automation system for sliding doors. It is simple to assemble as both the electric drive unit and electric panel are housed in a single extruded aluminium cabinet. Equipped with battery which ensures the opening in the event of a power outage, it is safe and quiet with its engine 24V. Control unit with microprocessor logic and anti-crushing device. Numerous opening and control accessories available.
Manual non-motorised version also available.

Door panel
see chart 1.1 > Partition Walls - Composition

Opening speed
0,8 m/s (1 wing)
1,6 m/s (2 wings)

Application
Easypharma partition plasterboard or brick wall

Accessories
See 2.2 > Doors - Accessories sheet

SEALED SLIDING DOOR

Automation system for totally airtight sliding doors, where the panel during the closing phase is lowered and moved sideways to compress against the seal on the door jamb perimeter and simultaneously against the floor, to guarantee total airtightness. Equipped with battery which ensures the opening in the event of a power outage, it is safe and quiet with its engine 24V. Control unit with microprocessor logic and anti-crushing device. Rounded cabinet with concealed screws. Integrated detection sensors flush-fitted in the automation system and exceptional silence levels make it the best product for use in contamination controlled environments.

Door panel
See chart 1.1 > Partition Walls - Composition

Opening speed
0,5 m/s (1 wing)
1,0 m/s (2 wings)

Applications
Easypharma partition plasterboard or brick wall

Accessories
See 2.2 > Doors - Accessories sheet

ROLL-UP

Automation system for roll-up doors perfectly airtight against wind, moisture and dust. The panel is flexible with no rigid elements, it is self-repairing as it automatically fits back onto the slide rails, and rolls up inside the small drum which houses the motor. Wireless electronic protection at the bottom of the panel for additional safety.

Application
parete mobile Easypharma, parete in cartongesso oppure muratura

Sheet
Reinforced polyester (PE-UHMW 1000)

Opening speed
Up to 2,7 m/s

Colour

Yellow	RAL 1013
Orange	RAL 2004
Red	RAL 3000
Blue	RAL 5002
Green	RAL 6005
Grey	RAL 7035
White	RAL 9010
Black	RAL 9005

This drawing is the exclusive property of Easypharma Srl and all extraction, reproduction or release to third parties is strictly prohibited without prior authorisation. Easypharma Srl shall protect and enforce its rights pursuant to the laws in force.

*

Each door has its own accessory!
Entrance doors for clean rooms, production areas, air locks, QC/R & D labs, locker rooms, heavy traffic areas, warehouses etc.
A wide range of accessories chosen for their quality and durability allow us to produce the perfect door to meet the requirements of every possible situation.

ACCESSORIES

HINGES	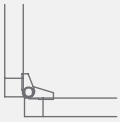 EXTERNAL	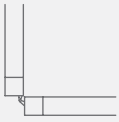 INTERNAL	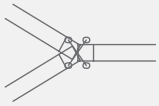 SWING
FRAME	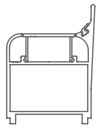 WITH SEAL	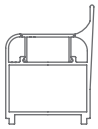 WITHOUT SEAL	•
DOOR CLOSERS	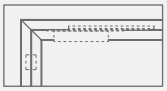 INTERNAL	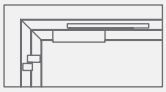 EXTERNAL	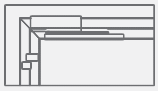 MOTOR POWERED
PRESS AND OPEN	ART. 11 PLAIN / PLAIN	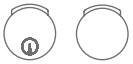 ART. 14 KEY / PLAIN	ART. 15 KEY / KEY
PUSH HANDLE [it is recommended to mount a door closer]	ART. P11 PLAIN / PLAIN	ART. P14 KEY / PLAIN	ART. P15 KEY / KEY
FIXED KNOB	POLISHED STAINLESS STEEL AND MAGNET KNOB	POLISHED STAINLESS STEEL AND PIN LOCK KNOB	•
CONVENTIONAL HANDLE	BRUSHED FINISH STAINLESS STEEL HANDLE	BRUSHED FINISH STAINLESS STEEL HANDLE AND PIN LOCK	•
FIXED HANDLE FOR GLASS DOORS	BRUSHED FINISH STAINLESS STEEL AND MAGNET HANDLE	BRUSHED FINISH STAINLESS STEEL HANDLE AND PIN LOCK	•
PANIC PUSH-BAR	TOUCHBAR	PUSHBAR	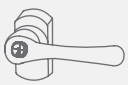 EXTERNAL HANDLE WITH CILINDER LOCK [KIT]
HANDLES FOR PB AND PT	SINGLE SATIN-FINISH STAINLESS STEEL HANDLE AND ROLL LOCK	•	•
AIR-STOP	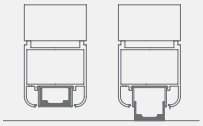 OPENING UP TO 10 MM	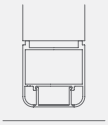 VERSION WITHOUT AIR-STOP	•

INTERLOCK

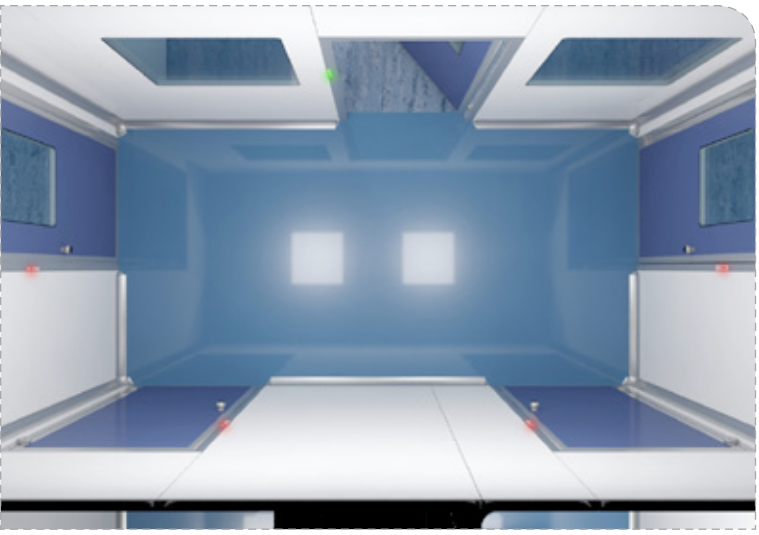

In contamination controlled environments interlock logic for the access and transit of persons and/or materials are essential. The proposed system is fully integrated within its own frame for doors, Pass-Box or Pass-Trolley products. It consists of: red/green double light signal with emergency release button, with an easy to clean screen printed polycarbonate coating; an electric lock, with integrated door status installed on the top inside the jamb, which mechanically prevents the door from opening; a multiple control unit (to manage from 2 to more ports) that can be programmed according to the different procedures, methods or timings required.
Description of a standard 2-door interlock: in stand-by mode with the doors closed, all the lights are green. When any door is opened, the mechanism locks the other door via the electric lock and the light signal changes from green to red. If the door remains open for a prolonged length of time, an audible timer alarm will go off to signal that the door has not been closed. The system returns to stand-by mode when the door is closed. In case of an emergency, the button on the light signal allows you to override the system and open the door, even if the light signal is red. This is called the "green logic".

INTERLOCK PREDISPOSAL

ON PARTITION WALLS

ON BRICKWALL

*insert box for light signal

INTERLOCKING TYPES

All open control lights and sensors are installed flush on the door jamb. In the case of brickwall/plasterboard doors, these accessories are mounted inside a stylish aluminium base.

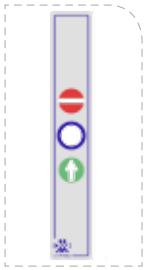

EASY LIGHTS

Light signal with button

with red/green LED lights and clear symbols to regulate transit. Central emergency release button

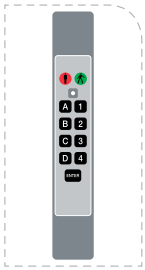

EASY CODE

Digipad access

For entries authorised only by entering a pin code on a programmable digipad.

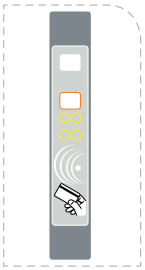

EASY BADGE

Stand-alone proximity badge reader

For entries authorised only by using programmable and personal proximity badges.
Platform and software for remote control of accesses in real time are also available.

EASY PROX

Proximity sensor

Unlocks the door by swiping your hand a few centimetres from the touch sensor.

TYPES

For further information on the glass panels, see: **4.1 - GLASS PANELS**

1 DOOR WING WITH PUSH AND OPEN KNOB AND EXTERNAL HINGE

1 DOOR WING WITH GLASS PANEL 500X700 mm, PUSH-PULL HANDLE AND INTERNAL HINGE

1 DOOR WING WITH MIRROR 500X1500 mm, STEEL KNOB AND EXTERNAL HINGE

1 FULLGLASS DOOR WING WITH STAINLESS STEEL PUSHBAR HANDLE AND PIN LOCK

1 HALFGLASS WING WITH PUSH AND OPEN KNOB AND EXTERNAL HINGE

1 FULLGLASS WING AND TOUCHBAR

1 SLIDING DOOR WING WITH GLASS PANEL 900X1000 mm

2 HINGED DOOR WINGS WITH GLASS PANELS 500X700 mm HANDLE AND CYLINDER LOCK

2 FULLGLASS WINGS AND STAINLESS STEEL HANDLE

2 SLIDING DOOR WINGS WITH GLASS PANELS 500X700 mm

1 DOOR WING ON BRICKWALL WITH GLASS PANEL 500X700 MM

1.5 DOOR WING ON BRICKWALL WITH PUSH AND OPEN KNOB

This drawing is the exclusive property of Easypharma Srl and all extraction, reproduction or release to third parties is strictly prohibited without prior authorisation. Easypharma Srl shall protect and enforce its rights pursuant to the laws in force.

*

Attention to detail in a product with a traditional look.
The typical 60 mm T-shaped structure is made from a vertical closed double-edge extruded aluminium profile, designed for interlocking with galvanized steel plates that create the orthogonal grid.
Each panel, chosen according to individual requirements, is fastened to the frame with panel clips and sealed to ensure and maintain the desired pressure in the clean rooms.
The hanging system is flexible and adaptable to every situation.
Structure, panels and lighting fixtures that compose our false ceilings are characterised by a uniform colour - semi-gloss white RAL 9010.

T60

T35

T60	«	STRUCTURE	»	T35
590X590 mm other measurements by request (x)		NET LIGHT (x)		**565x565mm**
650 (x+60) mm		PITCH		**600 mm**
615 (x+25) mm		PANEL DIMENSIONS		**590 mm**
2,2 Kg/mq		STRUCTURE WEIGHT		**1,2 Kg/sqm**
Extruded aluminium alloy 6060		MATERIAL		**Lamiera di acciaio presso-piegata**
80 Kg/sqm		LOAD CAPACITY		**12 Kg/sqm**
from ISO-3 to ISO-9		APPLICATION (FED STD 209E)		**from ISO-8 to ISO-9**
SAP10, SAP38, LP5, LP5P, SAH10, ALB4		PANELLING AVAILABLE		**SAP10, LP5, SAH10, ALB4**
White RAL 9010 (silver anodized natural on request)		COLOUR		**White RAL 9010**
1200x1200 mm		HANGER PITCH		**1200x1200 mm**

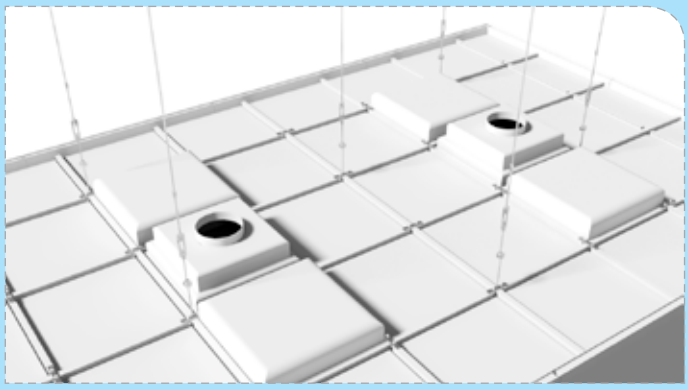

HANGER TYPE · M6

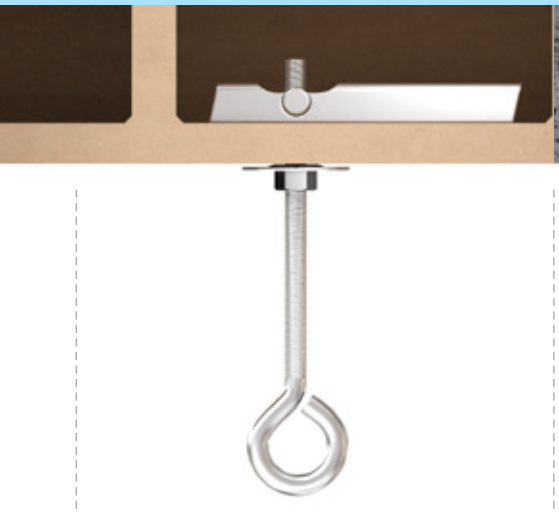

ANCHORAGE TYPE FOR LIGHTWEIGHT FLOORS [POTS]

QUICK FOR REINFORCED CONCRETE [AC]

A CLAMP FOR STEEL STRUCTURES [IPE]

TYPE OF PANELS

SAP10

Surface-mounted panelling consisting of a 0.6 mm sandwich in pre-coated aluminium RAL 9010, insulated with high-density polystyrene 30 Kg/m3. Complete with panel-block clips. Finished panel thickness 10 mm.

Declared thermal conductivity (λ) = 0,033 W/mK (EN 12667 or 13163) data of polystyrene

Fire resistance class
B-S2-D1 (EN 13501-1)

SAP38

Surface-mounted panelling consisting of a 0.6 mm sandwich in pre-coated aluminium RAL 9010, insulated with high-density polystyrene 30 Kg/m3. Complete with panel-block plates. Finished thickness 38 mm.

Declared thermal conductivity (λ) = 0,033 W/mK (EN 12667 or 13163) data of polystyrene

Fire resistance class
B-S2-D1 (EN 13501-1)

LP5

Surface-mounted panelling consisting of a HPL bi-decor white RAL 9010 (E001) panel. Complete with panel-block clips. Finished thickness 5 mm.

Declared thermal conductivity (λ) = 0,02 W/mK (EN 12667) by EASYPHARMA test

Fire resistance class
B-S2-D0 (EN 13501-1)

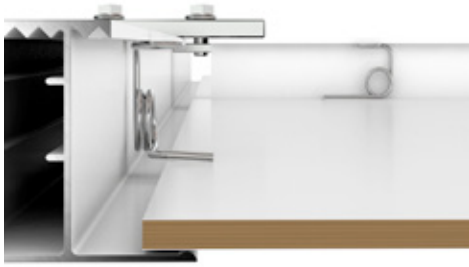

LP5P

Flush-fitting panelling consisting of a HPL bi-decor white RAL 9010 (E001) panel, milled on all four sides to be fitted perfectly flush with the false ceiling structure. Complete with panel-block clips. Finished thickness 5 mm.

Declared thermal conductivity (λ) = 0,02 W/mK (EN 12667) by EASYPHARMA test

Fire resistance class
B-S2-D0 (EN 13501-1)

SAH10

Surface-mounted panelling consisting of a 0.8 mm sandwich in pre-coated aluminium RAL 9010, insulated with aluminium honeycomb cells 12 mm diam. Complete with panel-block clips. Finished thickness 10 mm.

Declared thermal conductivity (λ) = 0,026 W/mK (EN 12667) STILL air

Fire resistance class
A2-S2-D0 (EN 13501-1)

ALB4

Surface-mounted panelling consisting of an ALB (alubond) bi-decor white RAL 9010 (E000) panel. Complete with panel-block clips. Finished thickness 4 mm.

Declared thermal conductivity (λ) = 0,040 W/mK (EN 12667)

Fire resistance class
C-S2-D0 (EN 13501-1)

V50

Support coupling system, perfectly compatible with R70 and R70N, if the false ceiling height is changed inside the same room (downstand).
The vertical panel can be made using the same ceiling panels, or with the partition walls.

Material
Extruded aluminium alloy 6060

Colour
White RAL 9010 (silver anodized natural on request)

LIGHTING SYSTEMS

Possibility of using fluorescent tubes or LEDs

LAMP T

Recessed lighting fixture for low-load false ceilings, with a steel sheet body, resting on the structure and tightly sealed. The prismatic polycarbonate (or tempered clear or frosted glass) optical diffuser is fitted inside a steel frame, fixed to the main structure with a clip system to guarantee safe and easy maintenance from below. Complete with electronic ballast and quick connector. Version for low load false ceilings with maintenance from inside the clean room zones.

Nominal sizes available
600x300 mm (2x18W), 600x600 mm (4x18W), 600x1200 mm (4x36W)

Colour
White RAL 9010

Protection rating
IP54 - IP65

TEARDROP

Lighting system suitable for areas with laminar flow, made of steel sheets (or stainless steel) and the typical teardrop shape with extremely reduced overall dimensions. The optical lens with transparent or frosted polycarbonate diffuser allows targeted delivery of light without creating turbulence in the air flow. These lighting systems are designed to be fixed directly to the structure of the false ceiling. They are built in a manner so as to permit continuous coupling.

Rated power available
1x18W, 1x36W, 1x58W

Colour
painted white RAL 9010 or satin-finish 304 stainless steel

This drawing is the exclusive property of Easypharma Srl and all extraction, reproduction or release to third parties is strictly prohibited without prior authorisation. Easypharma Srl shall protect and enforce its rights pursuant to the laws in force.

*

High load false ceiling is simple and functional.
The high load false ceiling made with the traditional 60 mm T-shape structure is accompanied by an innovative monolithic system, ideal for high sterility zones. Years of experience and targeted research have made it possible to connect a wide pitch flexible hanging system to the flush-fitting of its surface at the bottom, allowing easy mounting of filters and lighting fixtures.

HLFC

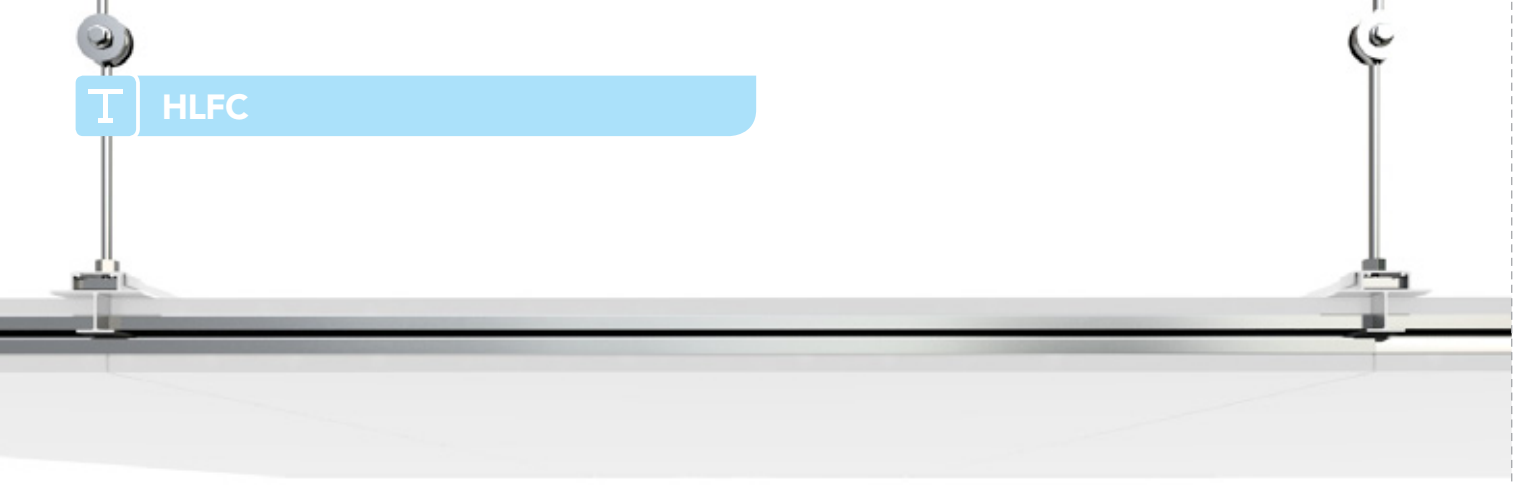

Completely flush-fitting HLFC high load false ceiling system.
The main element of the system is a sandwich panel consists of two steel plates pre-coated in RAL 9010 with an insulation that can vary according to demands. The panel is surrounded on all four sides by a frame of extruded aluminium which is inserted in the steel plates, rimmed and bevelled, to create the finished panel.
In addition to providing rigidity to the panel, it also serves as a housing for the false ceiling bearing structure.
This latter feature ensures a uniform 3 mm gap between the panels and makes it possible to create a flexible hanging system using a specially designed rail which allows the hangers to slide. This means that there is the possibility during installation of preventing interference with the facility systems present in the areas above.

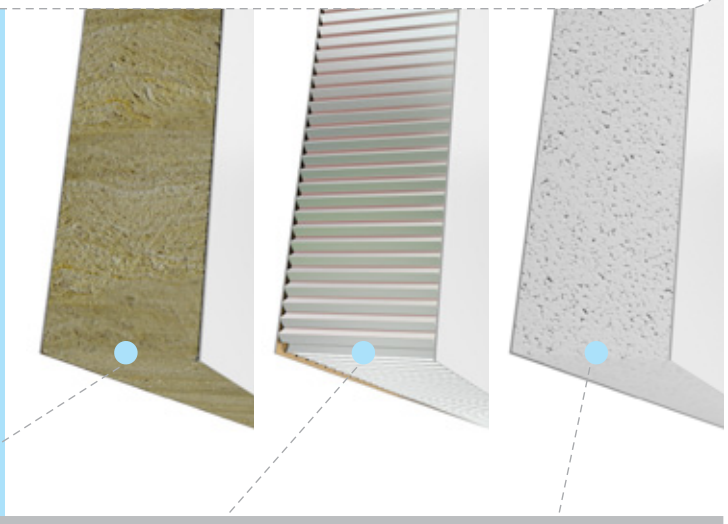

	HLFC-RW ROCKWOOL	HLFC-HC ALUMINIUM HONEYCOMB	HLFC-PL POLYSTYRENE
INSULATION DENSITY	100 Kg/m3	40 Kg/m3 - cell diam. 12 mm	35 Kg/m3
DECLARED THERMAL CONDUCTIVITY (λ)	0,037 W/mK (EN 12667 oR 14303)	0,026 W/mK (EN 12667) still air	0,033 W/mK (EN 12667 or 13163)
FIRE RESISTANCE CLASS - PANEL	A2-S1-D0	A2-S1-D0	B-S2-D0
PANEL PITCH	1003x2953 mm	1003x2953 mm	1003x2953 mm
PANEL DIMENSIONS	1000x2950 mm	1000x2950 mm	1000x2950 mm
PANEL THICKNESS	60 mm	60 mm	60 mm
SHEET THICKNESS	0,7 mm	0,7 mm	0,7 mm
COUPLING FITTING WIDTH	3 mm	3 mm	3 mm
PANEL AND STRUCTURE WEIGHT	22 Kg/sqm	21 Kg/sqm	20 Kg/sqm
DYNAMIC MAXIMUM LOAD	100 Kg/sqm	150 Kg/sqm	130 Kg/sqm
COLOUR	White RAL 9010	White RAL 9010	White RAL 9010
HANGER PITCH	1003x2953 mm	1003x2953 mm	1003x2953 mm

HANGERS STRUCTURE

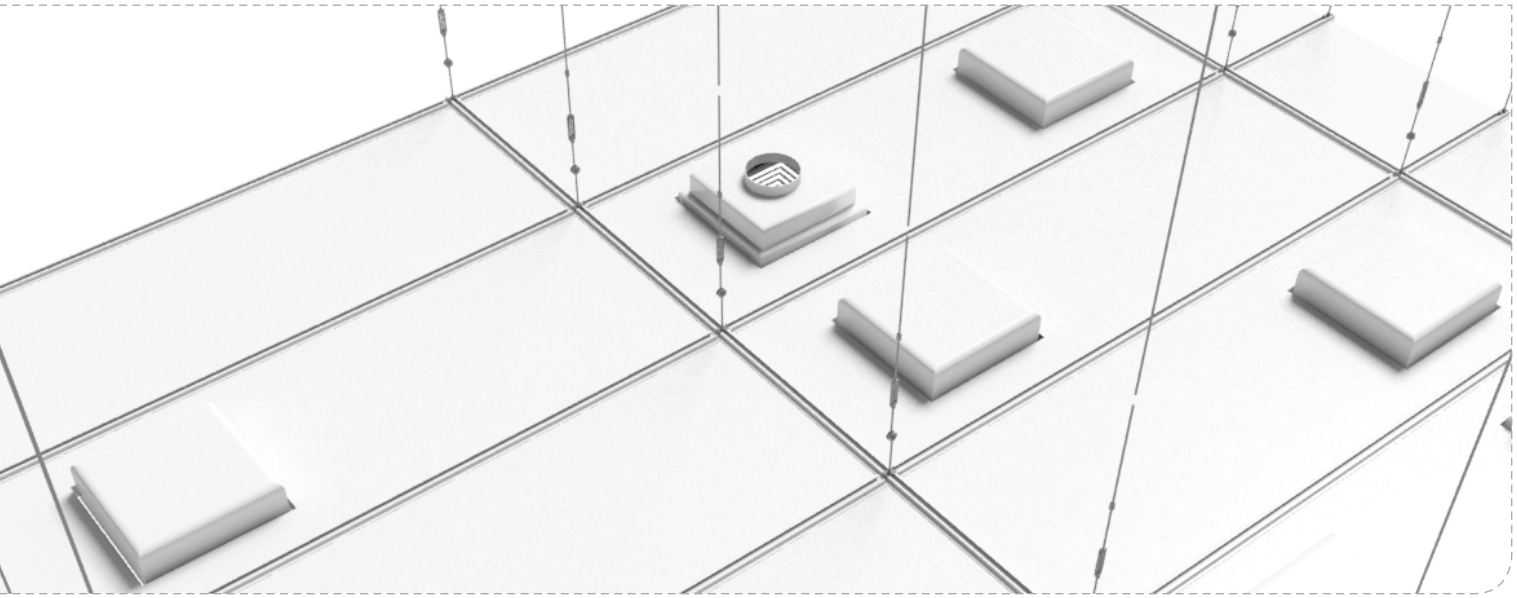

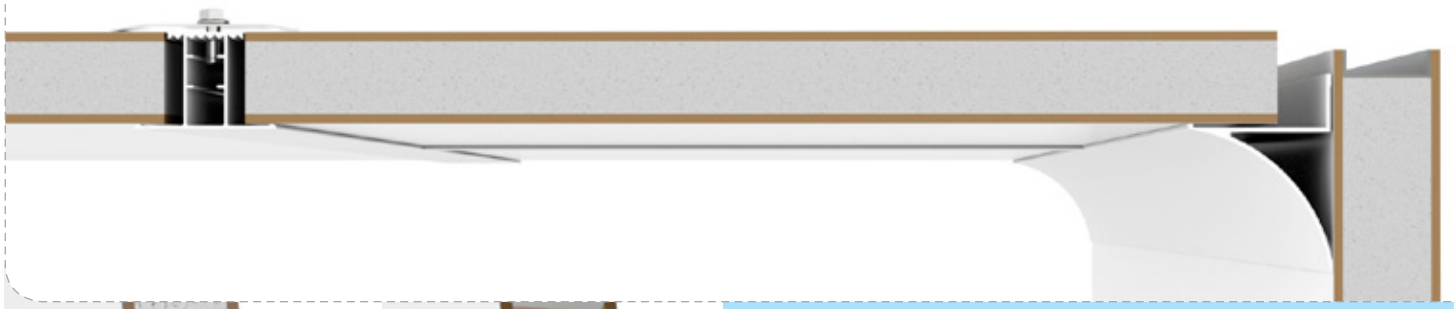

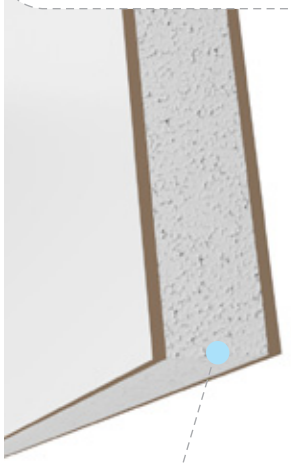

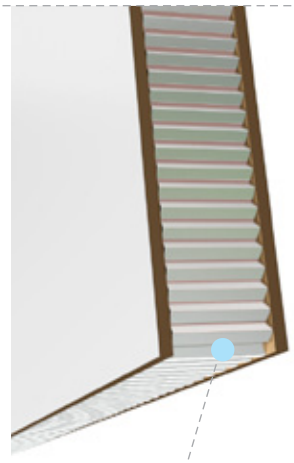

HL38 High load false ceiling system with panelling resting on the bearing structure.
Realised with the use of the T60 false ceiling structure, maintaining the classic look of a clean room at a nominal modularity of 600x600 mm or 600x1200 mm with the performance of a high-load false ceiling.
The panelling is realised with a 4 mm thick HPL sandwich with selected internal insulation giving the panel a total thickness of 38 mm. A galvanized steel plate blocks the panel ensuring it maintains the same thickness as the structure, allowing the creation of a level plane on the load surface.
A sturdy hanging system with M10 threaded galvanized steel rods guarantees a full load of 130 kg/sqm.

HT60-PL POLYSTYRENE	HT60-HC ALUMINIUM HONEYCOMB	
35 Kg/mc	40 Kg/mc	INSULATION DENSITY
0,942 W/mK (EN 12667) TEST EASY	0,062 W/mK (EN 12667) TEST EASY	DECLARED THERMAL CONSUCTIVITY (λ)
B-S3-D0	B-S2-D0	FIRE RESISTANCE CLASS - PANEL
590x590, 590x1190 mm other measurements by request (x)	590x590, 590x1190 mm other measurements by request (x)	NET LIGHT
650 (x+60) mm	650 (x+60) mm	PITCH
615 (x+25) mm	615 (x+25) mm	PANEL SIZE
140 Kg/sqm	170 Kg/sqm	DYNAMIC MAXIMUM LOAD
White E001 (RAL 9010)	White E001 (RAL 9010)	COLOUR
1200x1200 mm	1200x1200 mm	HANGER PITCH

HANGER TYPE · M10

QUICK FOR REINFORCED CONCRETE (AC)

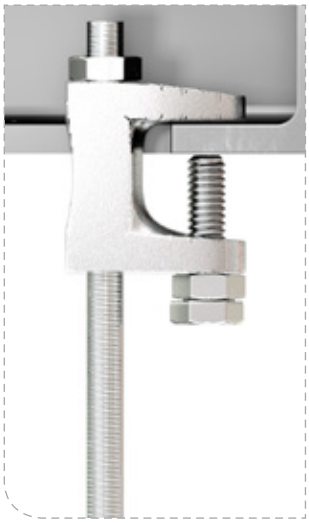

A CLAMP FOR STEEL STRUCTURES (IPE)

VEIL SECTION

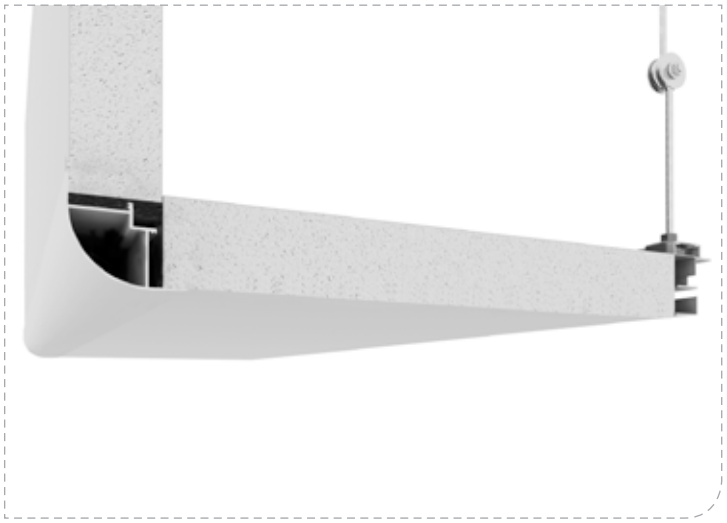

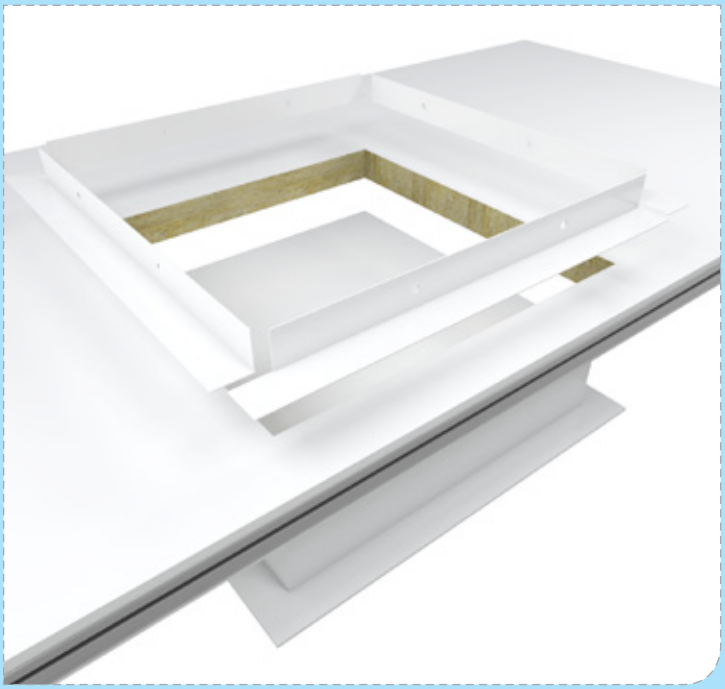

HLFC CEILING LIGHT

Recessed lighting fixture for high load false ceilings, with steel sheet body and optical lens with prismatic polycarbonate diffuser (or tempered, clear or frosted glass) fixed to the appliance with high-strength adhesives. Complete with electronic ballast and quick connector. The ceiling lamp is realised with a 40 mm larger than normal flange on the lower side to ensure perfect adherence to the panel and a total insulation from the environment above. A frame on the top side, made of painted steel, closes and completely insulates the lamp body. The appliance is easy to maintain accessing from the top side (load surface of the false ceiling).

Nominal sizes available
600x300 mm (2x18W), 600x600 mm (4x18W), 600x1200 mm (4x36W)

Colour
White RAL 9010

Protection rating
IP54

Fluorescent tubes or LEDs available providing warm or cool light

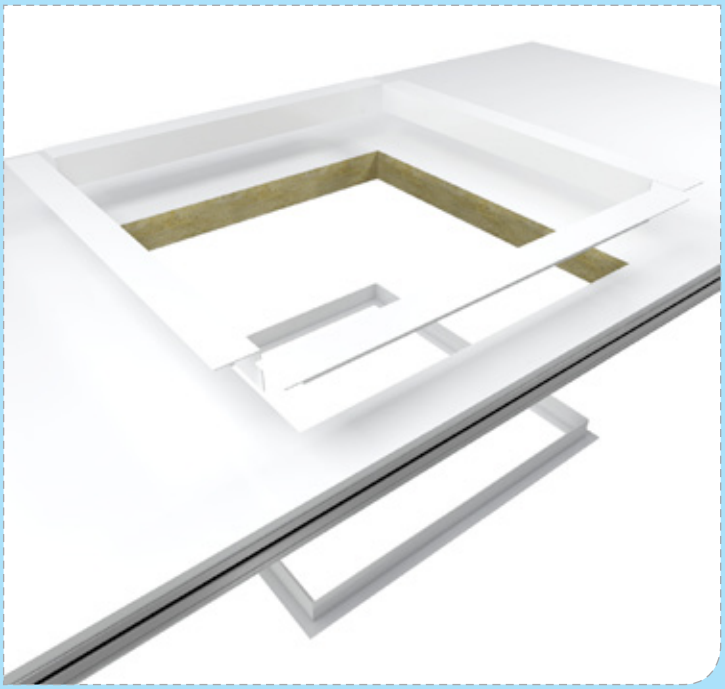

HLFC SUPPORT FRAME

A "T" bar in pre-painted steel sheet produced from high precision laser cutting of the solid sheet, to avoid any sign of welding. An adapter ideal for use with the most common types of lamps, filters, diffusers for high load false ceilings.
The support frame is secured to the panel with a structure on the top side, and is made of heavy gauge painted steel.

Nominal sizes available
600x300 mm (2x18W), 600x600 mm (4x18W), 600x1200 mm (4x36W)

Colour
White RAL 9010

This drawing is the exclusive property of Easypharma Srl and all extraction, reproduction or release to third parties is strictly prohibited without prior authorisation. Easypharma Srl shall protect and enforce its rights pursuant to the laws in force.

*

A sheet of heavy gauge glass, laminated or tempered, characterised by absolute transparency and quality certified with 10 years warranty. This is the Easypharma glass panel: the best result between quality and design that we could achieve.
To further expand these viewing points and make our clean rooms even more "open" and bright, we have created glass panels, one or two metres in height, for uninterrupted continuous vision.
The glass panels are always produced with 45 mm thick double glazing completely flush with the surface of the partition walls or doors.

GLASS DOORS

- Total double glazing thickness 45 mm
- Standard size doors: 500x700 mm
- Standard size wall: 900x1000 mm
- Radius available: R0 Right angle, R30 and R80
- 3 +3 safety glass or 6 mm tempered glass
- Natural silver colour structural raceway containing anti-condensation salts
- Satin finish by request to block vision whilst ensuring the diffusion of light
- For installations over 1000 meters above sea level, decompression valves are inserted in the glass panels
- Roller shutter type adjustable blinds can be fitted inside the double-glazing. Available with manual or electric open/close system

GLASS PANELS ON DOORS

1 door wing with glass panel
500x700 mm R30

1 door wing with mirror R80
500x1500 mm, 4 mm thick

1 sliding door with glass panel
900x1000 mm R80

1 FULLGLASS
door wing

1 HALFGLASS
door wing

1 door wing with handle
FULLGLASS TOUCHBAR

GLASS PANELS ON WALLS

Modular with glass panel
900x1000 mm R30

Modular with glass panel
900x1000 mm R80 satin

Double glass panel
900x1000 mm R30 on partition walls

FULLGLASS WALLS

Complete system with glass walls and doors perfectly flush with the partition walls. Consistent thickness of 45 mm
To exploit the sunlight, to make supervision and communication easier, to allow your customers to view your work from the visitor corridor.

Possibility to insert screen prints with your company logo.

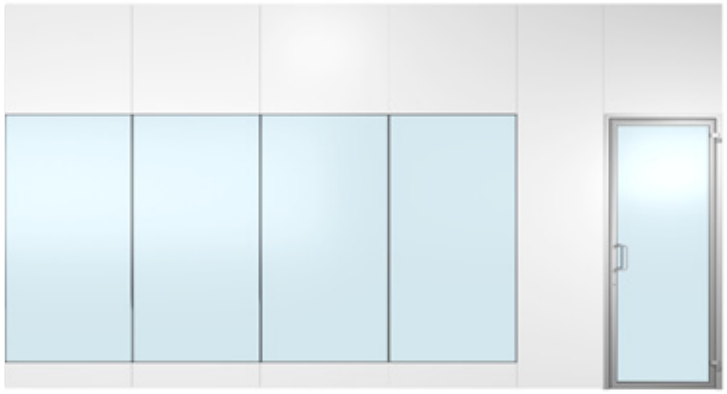

HALFGLASS WALLS

Complete system with glass doors and curtain glass wall panelling 45 mm thick and 1000 mm high, fitted perfectly flush with the partition walls. A different way of conceiving clean rooms, with large long glass panels 1100 mm from the floor level, ideal in situations where there are work benches or production equipment.

DOUBLE GLASS PANELS

» DOUBLE GLASS PANEL ON PARTITION WALL SYSTEM

Flush-fitting telescopic system to provide vision on a double wall. Made with two 45 mm thick glass panels with partition wall type inner structure.

Possible preparation for external PVC coating.

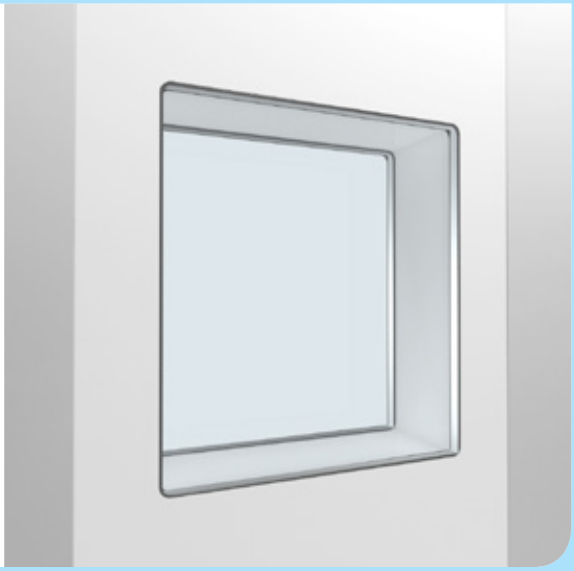

» DOUBLE GLASS PANEL ON BRICKWALL

Flush-fitting telescopic system to provide vision on a brick wall (>120 mm). Made with two 45 mm thick glass panels with partition wall type inner structure. It is coupled with a natural anodised aluminium "T"-shape frame.

Possible preparation for external PVC coating.

» SINGLE GLASS PANEL ON BRICKWALL

Surface-mounted system to provide vision on a brick wall (>100 mm). Made with one 45 mm thick glass panel edged with rounded natural silver anodised aluminium profiles. Solution that provides flush-fitting on one of the 2 sides of the glass panel with a stylishly rounded and easy to clean finish on the other side of the glass panel.

Ce dessin appartient exclusivement à Easypharma s.r.l. et ne peut être extrait, reproduit ou cédé à des tiers sans son autorisation préalable. Easypharma s.r.l. protègera ses droits selon la loi.

*

A specific line of furniture and accessories for changing rooms in contamination controlled environments is essential so as to combine design and functionality which conforms with the required standards. All the accessories are perfectly integrated within the Easypharma partition walls, or to be positioned on existing brick walls, and are the result of extensive research and selection of materials in terms of quality, reliability and ease of use.
The range consists of: lockers, benches and hand sanitising systems; all available in different versions, colours and finishes.

EASY LOCKER

Lockers for changing rooms in controlled contamination areas, and fully integrated and flush with the partition walls, with 7/10 thick HPL coated MDF doors. PVC edging.

Included accessories: knob and key locking system, metal tube with 2 clothes hooks, 2 shelves and front grille.

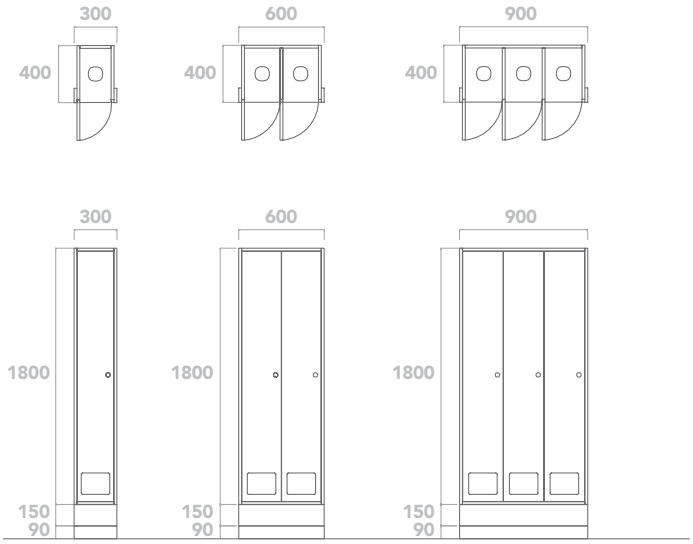

Colour
see chart 1.1 > Partition Walls - Composition

Standard size
single 300x400xh1800mm, double 600x400xh1800mm, triple 900x400xh1800mm

TYPES

2FACED
VERSION WITH DOOR OPENABLE FROM BOTH SIDES

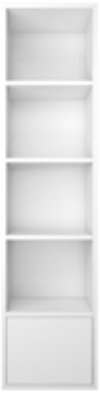

BOXED
VERSION WITH OPEN CONTAINER RACK
(WITHOUT CLOSING DOOR)

KEPT
VERSION WITH SWING DOOR FOR
COLLECTING DIRTY LAUNDRY.
POSSIBLE INSTALLATION OF A HAND STERILISER
IN THE TOP SECTION

DOUBLE
VERSION WITH DOUBLE L DOORS FOR SMALL SPACES

+AIRY
ALL LOCKERS CAN BE DESIGNED TO
ACCOMMODATE MECHANICAL VENTILATION
FROM ABOVE AND AN INTAKE GRILLE

+OUT
ALL LOCKERS CAN BE DESIGNED WITH A
SLOPED TOP AND EXPOSED LEGS FOR LOCKERS
IN NON-CLASSIFIED AREAS

EASY BENCH - S

Panca a scavalcare con alloggio calzature in entrambe i lati e sezione a "S". Interamente realizzata con lo stesso pannello delle pareti e profili estrusi in alluminio.
Possibilità di predisposizione per aspirazione forzata.

Colour
See chart 1.1 > Partition Walls - Composition

Aluminium colour
natural anodised silver (RAL 9010 on request)

Standard size
400xH500 mm, length up to 3000 mm

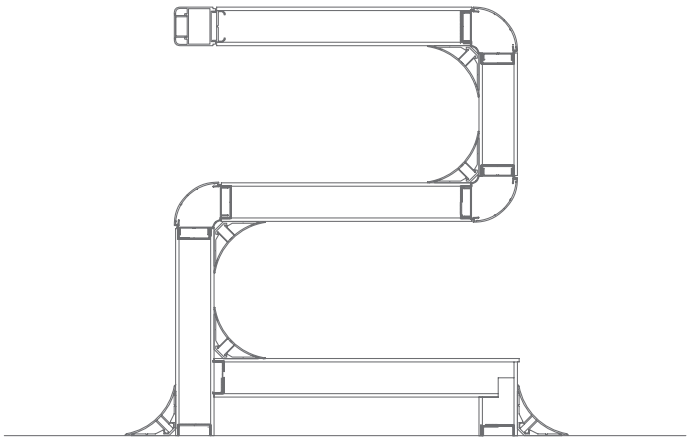

EASY BENCH - U

Inverted "U" shaped free-standing step over bench to change shoes/clothes. Entirely made with the same panel of the walls and extruded aluminium profiles.

Colour
See chart 1.1 > Partition Walls - Composition

Aluminium colour
natural anodised silver (RAL 9010 on request)

Standard size
400xH500 mm, length up to 3000 mm

EASY BENCH - L

Wall-mounted or cabinet-mounted bench for changing shoes/clothes. Inverted "L" shape. Entirely made with the same panel of the walls and extruded aluminium profiles.

Colour
See chart 1.1 > Partition Walls - Composition

Aluminium colour
natural anodised silver (RAL 9010 on request)

Standard size
400xH500 mm, length up to 3000 mm

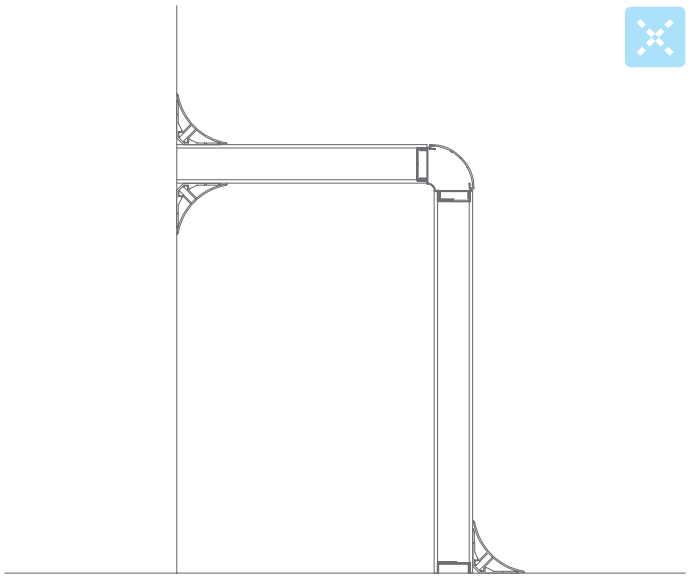

EASY STERIL

Electronic nebuliser to sanitise and sterilise hands.

The appliance is built-in to the double wall providing the ideal solution for small spaces, while maintaining the linearity and design that distinguishes it. Designed specifically to sanitise hands quickly and safely, without contact with taps, towels, disinfectant containers, etc.

- Made entirely of polished finish AISI 304 stainless steel
- Automatic start with photocells
- Does not need a drain or plumbing work (stand alone system)
- Nebulises medical alcohol only
- Red LED low disinfectant liquid level indicator
- Easy maintenance from the front (with a tank capacity of 2000 ml)

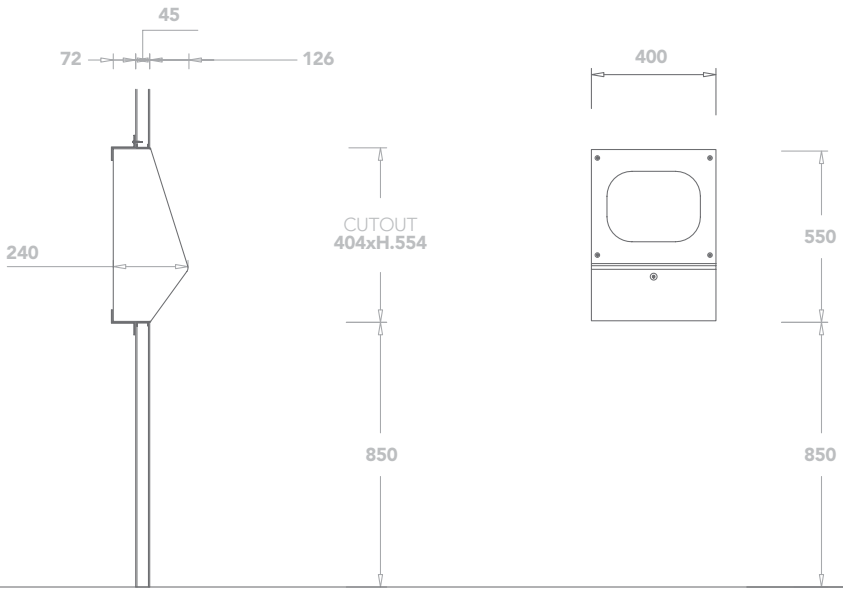

This drawing is the exclusive property of Easypharma Srl and all extraction, reproduction or release to third parties is strictly prohibited without prior authorisation. Easypharma Srl shall protect and enforce its rights pursuant to the laws in force.

*

Essential elements in sterile environments in production, quality control laboratories, goods and bulk materials flow areas, in controlled environments.
The germicidal treatment provided inside the Pass Box and Pass Trolley is generated by direct irradiation (programmable) with UV-C lamps, ensuring sterility on the surfaces reached and the surrounding air, in turn, previously filtered through absolute H14 filters.
An important advantage of this physical (not chemical) disinfection procedure is that bacteria, viruses, spores, fungi, moulds and mites are all sensitive to UV-C radiation, and consequently the microbial load on treated products is eliminated.
There are several extensive solutions of optional accessories, designed to offer a solution for every possible requirement.

STATIC PASS-BOX [PB]

Complete system for the passage of small objects between rooms. Fully integrated and flush-fitted on the partition wall. The door wings are made from the same profile as the anodised aluminium doors, FULLGLASS glass and 10/10 scotch-brite finish stainless steel interior.
Complete with stainless steel handles and perimeter seals.

Exterior colour
See chart 1.1 > Partition Walls - Composition

Standard size
BxHxP – 600x600x600 mm - 800x800x800 mm
(or other as requested by the Customer)

+INTERLOCK · Version with complete electronic interlock system and EASY LIGHTS programmable timer. (See 6.0 DOORS - Accessories).

+AIRY · Version designed to connect to the central laminar flow system. Made with perforated stainless steel grille on the shelf and hole for the absolute filter on the top.

+UV · Version with 2 UV-C type germicidal lamps installed on the top.

+COM · Version designed to accommodate a concealed flush-fitted intercom, with protective membrane, inside the door frame. This solution allows for easy hands-free communication between operators who are on either side of the pass-box, thanks to the high performance of the device

+OUT · ersion for column installation in environments without Easypharma partition walls.

DYNAMIC PASS-BOX [DPB]

Complete stand-alone system for the passage and filtration of small objects. Fully integrated and flush-fitted on the partition wall. The door wings are made from the same profile as the anodised aluminium doors, FULLGLASS glass and 10/10 scotch-brite finish stainless steel interior.
Complete with stainless steel handles and perimeter seals.

Included accessories

- complete electronic interlock system and EASY LIGHTS programmable timer. (see 2.2 DOORS - Accessories)
- High-efficiency HEPA FILTER H14 fluid seal, easy to remove and change from below - RSC (room side change)
- Stainless steel perforated grille on the support surface, easily removed for cleaning.
- FFU RSC self-ventilating unit (room side change) AC 230V-1ph-50Hz
  - Made from aluminium.
  - 5-speed control panel (3rd nominal flow speed of 0.45 m/s)
- No.2 Dwyer Magnehelic analogues to control and manage air flow and filter status.
  - electrical wiring, connectors, flow channelling duct and accessories installed and tested during the manufacturing phases
- No. 2 UV/C type germicide lamps inserted in the top section of the pass-box

Exterior colour
See chart 1.1 Partition Walls - Composition

Standard size
BxHxP – 600x600x600 mm - 800x800x800 mm
(or other as requested by the Customer)

+COM · Version designed to accommodate a concealed flush-fitted intercom, with protective membrane, inside the door frame. This solution allows for easy hands-free communication between operators who are on either side of the pass-box, thanks to the high performance of the device.

+OUT · Version for column installation in environments without Easypharma partition walls.

STATIC PASS-TROLLEY [PT]

Complete system for the passage of materials on the ground between two or more environments. The door wings are completely integrated and flush-fitted with the partition walls and made from the same profile as the anodised aluminium doors, FULLGLASS glass and partition wall type 45 mm thick internal panelling. Floor connections with R70 coving profile. Complete with stainless steel handles, perimeter seals and air-stop on the floor.

Exterior colour
See chart 1.1 Partition Walls - Composition.

Standard size
BxHxP – 1000x1500x1270 mm - 1500x1500x1270 mm
(or other as requested by the Customer)

+AIRY · Version designed to connect to the central laminar flow system. Made with perforated stainless steel grille on one side and hole for the absolute filter on the top.

+UV · Version with 2 UV-C type germicidal lamps installed on the top.

+COM · Version designed to accommodate a concealed flush-fitted intercom, with protective membrane, inside the door frame. This solution allows for easy hands-free communication between operators who are on either side of the pass-trolley, thanks to the high performance of the device.

+SS · Version with internal scotch-brite finish stainless steel coating.

+OUT · Version for column installation in environments without Easypharma partition walls.

DYNAMIC PASS-TROLLEY [DPT]

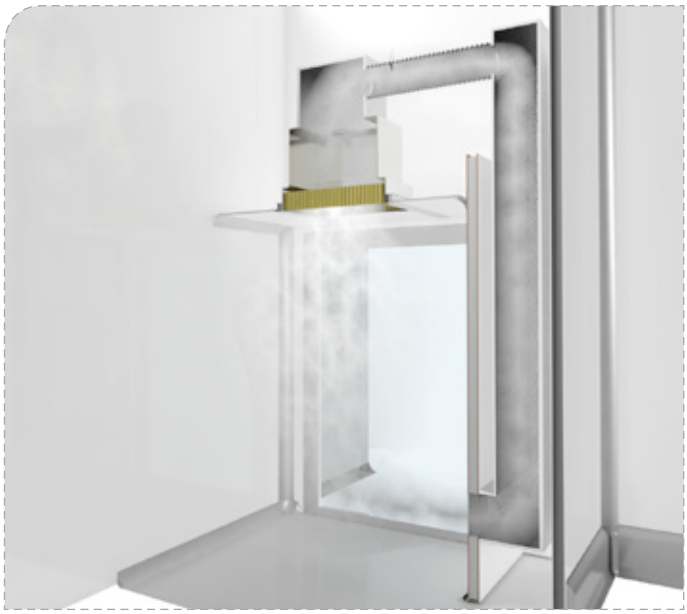

Complete system for the passage of materials on the ground between two or more environments. Fully integrated and flush-fitted on the partition wall. The door wings are made from the same profile as the anodised aluminium doors, FULLGLASS glass and 45 mm thick internal partition wall type panel. Floor connections with R70 coving profiles. Complete with stainless steel handles, perimeter seals and air-stop on the floor.

Included accessories

- Complete electronic interlock system and EASY LIGHTS programmable timer. (see 2.2 Doors - Accessories)
- High-efficiency HEPA FILTER H14 fluid seal, easy to remove and change from below - RSC (room side change)
- Stainless steel perforated grille positioned on the side support surface, easily removed for cleaning.
- FFU RSC self-ventilating unit (room side change) AC 230V-50Hz-1ph
- Made from aluminium.
  - 5-speed control panel (3rd nominal flow speed of 0.45 m/s)
- No.2 Dwyer Magnehelic analogues to control and manage air flow and filter status.
  - electrical wiring, connectors, flow channelling duct and accessories installed and tested during the manufacturing phases
- No. 2 UV/C type germicide lamps inserted in the top section of the pass-box

Exterior colour
See chart 1.2 > Partition Walls - Composition

Standard size
BxHxP – 1000x1500x1270 mm - 1500x1500x1270 mm
(or other as requested by the Customer)

+COM · Version designed to accommodate a concealed flush-fitted intercom, with protective membrane, inside the door frame. This solution allows for easy hands-free communication between operators who are on either side of the pass-trolley, thanks to the high performance of the device.

+OUT · Version for column installation in environments without Easypharma partition walls.

TYPES

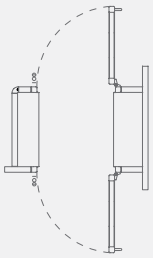

PB 2WAYS
PASS-BOX VERSION WITH 2 WINGS FOR 2-WAY TRANSIT

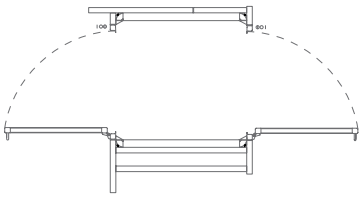

PT 2WAYS
PASS-TROLLEY VERSION WITH 2 WINGS FOR 2-WAY TRANSIT

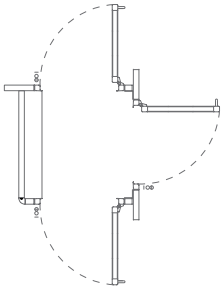

PB 3WAYS
PASS-BOX VERSION WITH 3 WINGS FOR MULTIPLE WAY TRANSIT

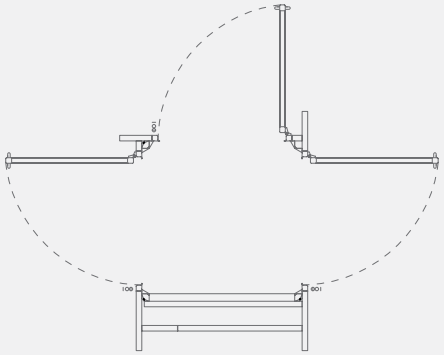

PT 3WAYS
PASS-TROLLEY VERSION WITH 3 WINGS FOR MULTIPLE WAY TRANSIT

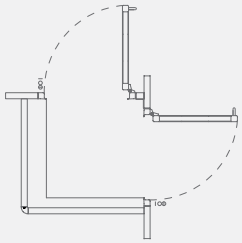

PB L
PASS-BOX VERSION WITH L-SHAPED DOOR WING

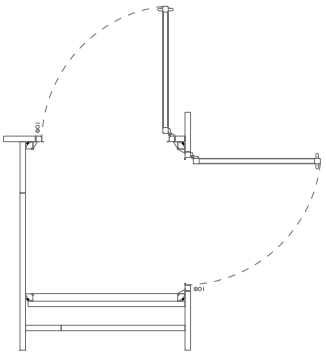

PT L
PASS-TROLLEY VERSION WITH L-SHAPED DOOR WING

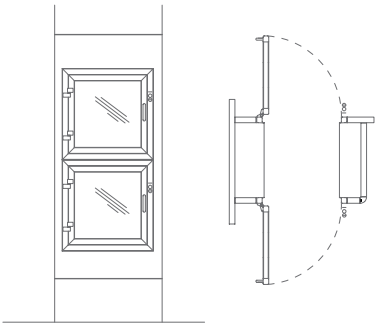

PB DOUBLE
VERSIONS WITH 2 STACKED PASS-BOXES (4 WINGS) AND MULTIPLE DIRECTION INTERLOCKS (MATERIAL ENTRANCE/EXIT)

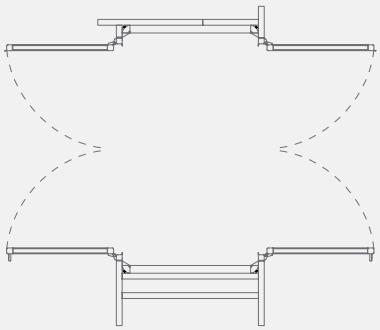

PT 2WINGS
PASS-TROLLEY VERSION WITH DOUBLE WING DOOR FOR TRANSIT DIMENSIONS OF > 1000 MM

This drawing is the exclusive property of Easypharma Srl and all extraction, reproduction or release to third parties is strictly prohibited without prior authorisation. Easypharma Srl shall protect and enforce its rights pursuant to the laws in force.

EASYPHARMA S.r.l.

Via 1° Maggio, 87 20885
Ronco Briantino [MB] · ITALY
Partita IVA 03192670960
C.F. 02361520139

Tel. +39 039 6817142
Fax +39 039 6817135
E-mail info@easypharma.com
Web *www.easypharma.com*

Iscrizione alla C.C.I.A.A di Monza e Brianza
Reg.Imprese 02361520139 · **N° R.E.A.** MB1656228
N° Meccanografico MB042815
CAPITALE SOCIALE 20.000,00€ interamente versato